CLARK EQUIPMENT INDUSTRIAL TRUCK DIVISION CLARK EQUIPMENT

OPERATORS MANUAL

FOR

EC (SG) 50-60-70

0-218

CLARK EQUIPMENT COMPANY

PUBLISHED BY

TECHNICAL SERVICE DEPARTMENT,

BATTLE CREEK, MICHIGAN, U.S.A.

OPERATORS MAINTENANCE PARTS MANUAL

FOR

CY-60

CLARK EQUIPMENT COMPANY

PUBLISHED BY

TECHNICAL SERVICE DEPARTMENT

BATTLE CREEK, MICHIGAN, U.S.A.

SAFETY INSTRUCTIONS FOR MAINTAINING INDUSTRIAL TRUCKS

Powered industrial trucks may become hazardous if adequate maintenance is neglected. Therefore, adequate maintenance facilities, personnel and procedures should be provided.

Maintenance and inspection of all powered industrial trucks should be performed in conformance with the recommendation in this manual and the following practices.

1. A scheduled preventive maintenance, lubrication, and inspection system should be followed.

2. Only qualified and authorized personnel should be permitted to maintain, repair, adjust, and inspect industrial trucks.

3. Before Leaving The Truck:

   A. Stop truck.

   B. Fully lower the load engaging means.

   C. Place directional controls in neutral.

   D. Apply the parking brake.

   E. Stop the engine or turn off power.

   F. Lock the control or ignition circuit.

   G. Block the wheels if truck is on a ramp, or being worked on.

4. Before Working On Truck:

   A. Raise wheels free of floor or disconnect power source.

   B. Use chocks or other positive truck positioning devices.

   C. Block load engaging means, innermast(s), or chassis before working under them.

   Before working on engine fuel system of gasoline powered trucks with gravity feed fuel systems, be sure fuel shutoff valve is closed.

   Before working on engine fuel system of LP gas powered trucks, close LP gas cylinder valve and run engine until fuel in system is depleted and engine stops running.

   Operation to check performance of the truck or attachments should be conducted in an authorized, safe clearance area.

5. Before Starting To Operate The Truck:

   A. Be in operating position.

   B. Depress clutch (or brake pedal on automatic transmission and electric trucks).

   C. Place directional controls in neutral.

   D. Start engine or turn on power.

   E. Before operating truck, check functioning of lift and tilt systems, directional and speed controls, steering, warning devices, brakes, and any attachment. (If used)

   F. Release parking brake.

- continued -

SAFETY INSTRUCTIONS FOR MAINTAINING INDUSTRIAL TRUCKS

6. Avoid fire hazards and have fire protection equipment present. Do not use an open flame to check level, or for leakage, of fuel, electrolyte or coolant. Do not use open pans of fuel or flammable cleaning fluids for cleaning parts.

7. Properly ventilate work area, vent exhaust fumes and keep shop clean and floor dry.

8. *Handle LP gas cylinders with care. Do not drop, dent, or damage in any way.*

9. Brakes, steering mechanisms, control mechanisms, warning devices, lights, governors, lift overload devices, guards and safety devices should be inspected regularly and maintained in a safe operating condition.

10. All parts of lift and tilt mechanisms and frame members should be carefully and regularly inspected and maintained in a safe operating condition.

11. Special trucks or devices designed and approved for hazardous area operation should receive special attention to ensure that maintenance preserves the original, approved *safe operating features.*

12. Fuel systems should be checked for leaks and condition of parts. Extra special consideration should be given in the case of a leak in the fuel system. Action should be taken to prevent the use of the truck until the leak has been corrected.

13. All hydraulic systems should be regularly inspected and maintained in conformance with good practice. Tilt cylinders, valves, and other similar parts should be checked to assure that "drift" has not developed to the extent that it would create a hazard.

14. Capacity, operation and maintenance instructions plates, tags, or decals should be maintained in legible condition.

15. Batteries, motors, controllers, limit switches, protective devices, electrical conductors and connections should be inspected and maintained in conformance with good practice. Special attention should be paid to the condition of electrical insulation.

16. Industrial trucks should be kept in a clean condition to minimize fire hazards and facilitate detection of loose or defective parts.

17. Modifications and additions which affect capacity and safe truck operation should not be performed by the customer or user without manufacturers prior written approval. Capacity, operation and maintenance instruction plates, tags or decals should be changed accordingly.

18. Care should be taken to assure that all replacement parts are interchangeable with the original parts and of a quality equal to that provided in the original equipment.

PLEASE NOTE

INSTRUCTIONS ON USE OF MANUAL

This Operator's Manual is published as a service reference guide and includes Specifications, Operating Instructions, Lubrication and Preventive Maintenance Instructions, and Trouble Shooting Guide.

The TABLE OF CONTENTS for this manual is printed on green paper and is placed at the front for easy reference. A separate INDEX (also printed on green paper) is placed in front of the Lubrication and Preventive Maintenance Section.

Lubrication and Preventive Maintenance Instructions are listed under the TIME INTERVALS that they should be performed.

The TIME INTERVAL is part of the page number and code number.

Example: 8H 002-0; 8H is the TIME INTERVAL (8 operating hours), 002 is the PAGE NUMBER, and -0 is a CODE NUMBER that you as a customer should disregard. The dash number or code number is for the benefit of the publisher only.

The INDEX is set up under the TIME INTERVALS that the Lubrication and Preventive Maintenance should be performed.

Example: (8 Hours)	Time Interval (H=Hours)	&	Page Number (000-)
Hydraulic Sump Tank, level check...	8H		503
Brake Pedal Free Travel, check.....	8H		373

The above states to check the sump tank fluid level every 8 operating hours and refer to page 503 for fluid recommendations etc. Also, to check brake pedal free travel at this interval and turn to page 373 for instructions.

Turn to the eight (8) hour section (8H) and then to the page listed — 503 or 373 etc. The instructions covered therein will pertain only to the checks or adjustments that should be performed at this TIME INTERVAL.

If, for instance, the Brake Pedal Free Travel is incorrect, you would then refer to the INDEX for "Brake Pedal Free Travel, adjust" which would be listed in the TIME INTERVALS following the 8 hour section.

Example: (100 Hours)	Time Interval (H=Hours)	&	Page Number (000-)
Brake Pedal Free Travel, adjust....	100H		302

Turn to the one hundred hour section (100H) and then to

page 302. Complete instructions as to the importance of pedal free travel, the method to check and adjust for correct free travel with illustrations are included therein.

NOTE

YOU WILL NOTE THAT AT THE BEGINNING OF EVERY SECTION A LUBRICATION AND PREVENTIVE MAINTENANCE ILLUSTRATION IS SHOWN GIVING THE LOCATION OF THE COMPONENTS TO BE SERVICED.

It is impossible to cover all types of machine operations in one manual. Operating conditions should determine the lubrication and maintenance intervals. Common sense and a close observance can best determine the frequency with which you should service your machine.

The care you give your machine will greatly determine the satisfaction and service life that you will obtain from it. A difinite maintenance program should be set up and followed. Haphazard maintenance will only lead to faulty performance and short life.

TABLE OF CONTENTS

INDUSTRIAL TRUCK DIVISION

TABLE OF CONTENTS

INDUSTRIAL TRUCK DIVISION

ILLUSTRATION OF MACHINE

Plate 7571. EC50, 60, 70

OPERATORS MAINTENANCE PARTS MANUAL

FOR

CY-60

CLARK EQUIPMENT COMPANY

PUBLISHED BY

TECHNICAL SERVICE DEPARTMENT

BATTLE CREEK, MICHIGAN, U.S.A.

INDUSTRIAL TRUCK DIVISION

SPECIFICATIONS

DIMENSIONAL SPECIFICATIONS

Electric

CLARKLIFT® 50

5,000 pound capacity at 24 inches

CAPACITY CHART*

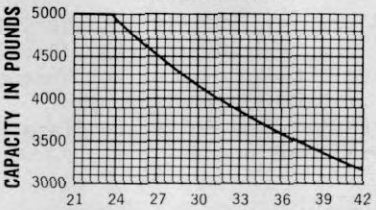

LOAD CENTER IN INCHES FROM FRONT FACE OF FORKS

* RATED CAPACITIES SHOWN ABOVE ARE COMPUTED WITH UPRIGHTS IN VERTICAL POSITION. THEY APPLY ONLY ON MAXIMUM FORK HEIGHTS UP TO AND INCLUDING 154"

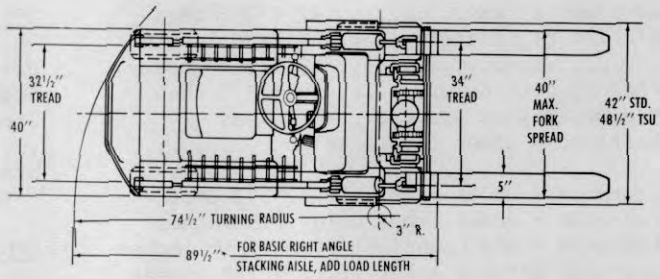

UPRIGHT DIMENSION TABLE

Max. Fork Ht. Std. Hi-Lo	Max. Fork Ht. TSU	Over-all Height Lowered	Free-Lift Std.	Free-Lift Hi-Lo	Free-Lift TSU
76	—	56	13½	32¾	—
82	—	59	13½	35¾	—
88	—	62	13½	38¾	—
94	126	65	13½	41¾	11½
100	135	68	13½	44¾	11½
*106	*144	71	13½	47¾	11½
112	153	74	13½	50¾	11½
118	162	77	13½	53¾	11½
124	171	80	13½	56¾	11½
*130	*180	83	13½	59¾	11½
136	189	86	13½	62¾	9½
142	198	89	13½	65¾	9½
148	207	** 92	11½	68¾	9½
*154	*216	** 95	11½	71¾	9½
160	225	** 99	13½	75¾	9½
172	243	**106	13½	82¾	9½
*178	252	**109	11½	85¾	9½
184	—	112	11½	88¾	—
190	—	116	13½	92¾	—
196	—	119	11½	95¾	—
202	—	123	13½	99¾	—
208	—	126	11½	102¾	—

*Preferred standard heights.
**Add 1" for triple stage upright.
For overall height raised add 20" to maximum fork height.

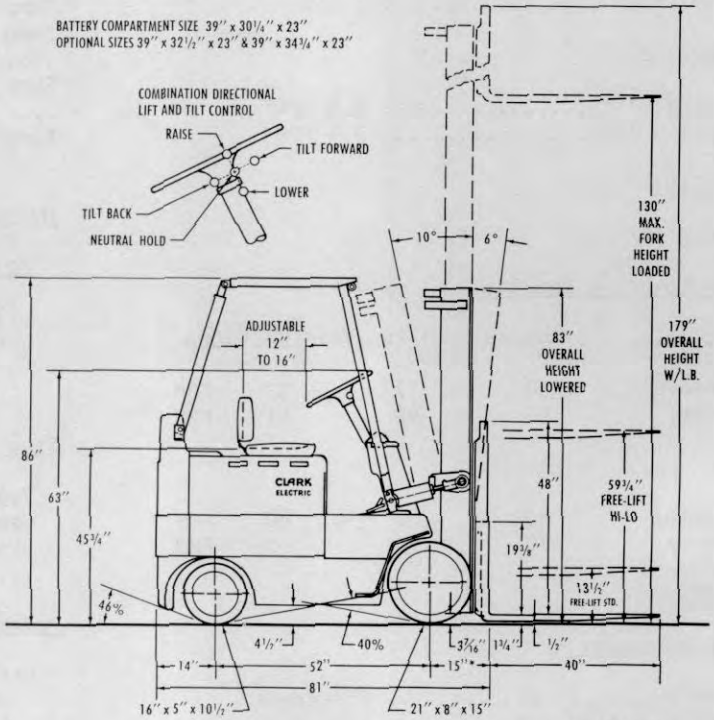

*ADD 1½" FOR TRIPLE STAGE UPRIGHT

CERTIFIED BY CLARK ENGINEERING DEPT

NOTE: Clark products and specifications are subject to improvements and changes without notice.

Industrial Truck Division
Battle Creek, Michigan

GAS/DIESEL/ELECTRIC FORK LIFTS
ELECTRIC NARROW AISLE TRUCKS
ELECTRIC HAND TRUCKS/STRADDLE CARRIERS
TOWING TRACTORS/COMPLETE LINE OF HANDLING DEVICES

INDUSTRIAL TRUCK DIVISION

SPECIFICATIONS FOR EC50

GENERAL:

Type of vehicle..... Electric Rider
Overall length with forks ..... 121 inches
Overall length without forks... 79 1/4 inches
Overall width..... 42 inches
Overall height with 130" MFH upright.....
.... 83" Lowered, 179" Raised

Single Drive:

Tread drive tires..... 34 inches
Tread steer tires..... 32 1/2 inches
Basic aisle for right angle stacking (add length of load) ..... 89 1/2 inches
Turning radius, outside ..... 74 1/2 inches
Turning radius, inside ..... 3 inches
Ground clearance - under counterweight .....
..... 4 5/8 inches
Ground clearance - under rear axle .. 3 inches
Ground clearance - under front axle .. 5 inches
Ground clearance - under upright ... 3 7/16 inches
Ground clearance between axles ..... 4 1/2 inches
Grade clearance 40%

Travel Speeds:

Loaded: 1st..... 7.1 MPH
Empty: 1st..... 7.4 MPH

Gradeability:

Loaded 10%

Lifting & Lowering Speeds:

Lift	STANDARD	HI-LO	TRIPLE STAGE	
Loaded	38	37	33	FPM
Empty	55	45	41	FPM
Lower				
Loaded	80	80	80	FPM
Empty	70	60	60	FPM

STEER AXLE:

Axle Alignment:

Toe-In ..... 0 degrees
Camber Angle ..... 1 degree
Caster ..... 0 degrees

Left-hand Turning Radius Angle:

Left wheel ..... 76 degrees
Right wheel ..... 54 degrees

Right-hand Turning Radius Angle:

Left wheel ..... 54 degrees
Right wheel ..... 76 degrees

DRIVE AXLE:

Ratio ..... 4.09 to 1
Differential Capacity ..... 6 Pints
Wheel End Capacity (each end) ... 1 1/4 lbs.

WHEELS AND TIRES:

Size ..... (Front) 21x8x15
Size ..... (Rear) 16x5x10 1/2

SPLIT RIM WHEELS:

Drive Wheel .... 450-500 ft. lbs. (Dry Thread)
Steer Wheel .... 275-300 ft. lbs. (Dry Thread)
Steering Gear Pitman Arm Lock Nut Torque.....
..... 120-130 foot pounds
Steering Gear Mounting Bolts and Clamp Bolt Torque 40-50 foot pounds

HYDRAULIC SYSTEM:

Sump Tank Capacity ..... 8 1/4 gallons
Sump Tank Filter (Replaceable) .....
..... 25-40 micron
Sump Tank Breather (Replaceable) .....
..... 40 micron
Sump Tank Filter Attaching Bolts Torque ....
.... 35 to 45 inch lbs.

Hydraulic Pumps:

Main Pump:

Type ..... Gear Type, Dual Outlet
Capacity ....
Lift 13.3 G.P.M. at 1800 Motor R.P.M.
Tilt 6.0 G.P.M. at 1800 Motor R.P.M.

Steer Pump:

Type ..... Gear Type
Capacity ..... 2.15 G.P.M. at 2000 R.P.M.
System Pressure Relief Valve Setting .....
..... 550 P.S.I.

Hydraulic Valve:

Pressure Relief Valve Setting .....
Tilt 1750 P.S.I.
Lift 1900 P.S.I.

BRAKE SYSTEM:

Type ..... Hydraulic
Brake Pedal Free Travel ...3/8 to 1/2 inches (as measured from top pedal position -to- where pedal meets resistance from the master cylinder)..

BATTERY:- Lead Acid (3x6 Cell Layout) 36 Volts

18 Cell 27 Plate
Exide Types TG(P), TSC

BATTERY CONTINUED:

Gould Types 72x, 85T
K-W Types FH-FK-HT
C & D Types HC, HY (HY Cells increase battery comp. height by 3").

TORQUE VALUES:

Axle Mounting Ring Bolts ..... 650-700 lb.ft.
Handwheel to Steer Gear Shaft Nut.. 35-40 lb.ft.
CTWT to Spacer MTG Bolts ..... 650-700 lb.ft.
Axle End to Adaptor Bolt ..... 250-270 lb.ft.
Axle End to Adaptor Stud ..... 180-200 lb.ft.
Axle End to Adaptor Stud Nuts .. 180-200 lb.ft.
Steer Axle MTG Bolts, Silent Block to Axle .. .. 130-180 lb.ft.
Motor MTG Bracket to Motor & Frame Bolts .... 250-300 lb.ft.

SPEEDS AND GRADES AT 36 VOLTS:

Travel speed, forward and reverse, loaded - Up to 7.1 m.p.h.
Travel speed, forward and reverse, empty - Up to 7.4 m.p.h.
Gradeability with rated load 10%

Lift Speed, F.P.M.
Standard
Loaded 38
Empty 55
Hi-Lo
Loaded 37
Empty 45
Lowering Speed, F.P.M.
Standard
Loaded 80
Empty 70
Hi-Lo
Loaded 80
Empty 60

POWER SUPPLY:

Lead acid battery in steel trays 36 volt.

18 cells, 25 plate
Exide Types: TG(P), TSC
Gould Types: 72X, 85T
*C & D Types: HC, HY
K - W Types: FH - FK - HT

Battery compartment is designed for top and side removal of battery. The standard compartment size is:

39" W x 30 1/4" L x 23" H
with 39" W x 32 1/2" L x 23" H
and 39" W x 34 3/4" L x 23" H also available.

*HY cells increase battery compartment height 3 inches.

INDUSTRIAL TRUCK DIVISION

SPECIFICATIONS

DIMENSIONAL SPECIFICATIONS

Electric

CLARKLIFT® 60

6,000 pound capacity at 24 inches

CAPACITY CHART*

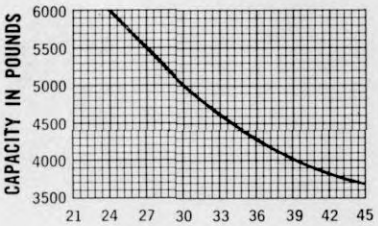

* RATED CAPACITIES SHOWN ABOVE ARE COMPUTED WITH UPRIGHTS IN VERTICAL POSITION. THEY APPLY ONLY ON MAXIMUM FORK HEIGHTS UP TO AND INCLUDING 154″

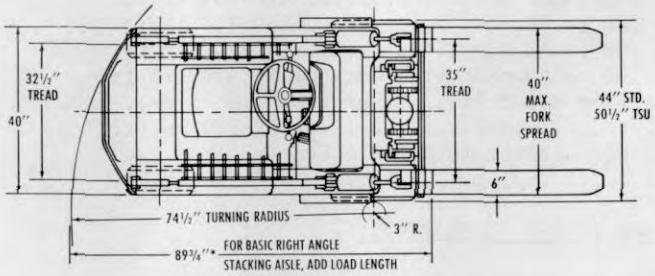

BATTERY COMPARTMENT SIZE 39″ x 30¼″ x 23″
OPTIONAL SIZES 39″ x 32½″ x 23″ & 39″ x 34¾″ x 23″

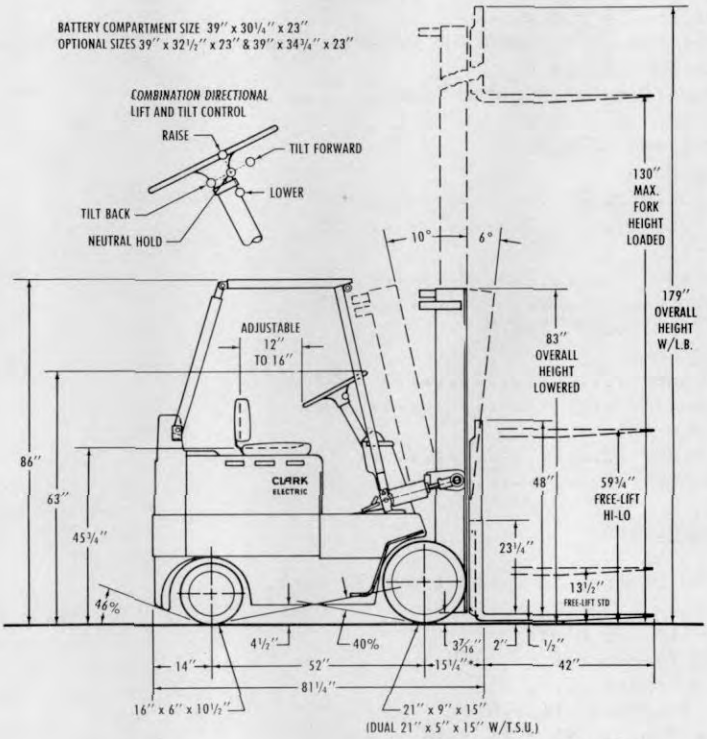

*ADD 1½″ FOR TRIPLE STAGE UPRIGHT

UPRIGHT DIMENSION TABLE

Max. Fork Ht.		Over-all Height Lowered	Free-Lift		
Std. Hi-Lo	TSU		Std.	Hi-Lo	TSU
76	—	56	13½	32¾	—
82	—	59	13½	35¾	—
88	—	62	13½	38¾	—
94	126	65	13½	41¾	11½
100	135	68	13½	44¾	11½
*106	*144	71	13½	47¾	11½
112	153	74	13½	50¾	11½
118	162	77	13½	53¾	11½
124	171	80	13½	56¾	11½
*130	*180	83	13½	59¾	11½
136	189	86	13½	62¾	9½
142	198	89	13½	65¾	9½
148	207	** 92	11½	68¾	9½
*154	*216	** 95	11½	71¾	9½
160	225	** 99	13½	75¾	9½
172	243	**106	13½	82¾	9½
*178	252	**109	11½	85¾	9½
184	—	112	11½	88¾	—
190	—	116	13½	92¾	—
196	—	119	11½	95¾	—
202	—	123	13½	99¾	—
208	—	126	11½	102¾	—

*Preferred standard heights.
**Add 1″ for triple stage upright.
For overall height raised add 20″ to maximum fork height.

CERTIFIED BY ELECTRIC ENGINEERING DEPT

NOTE: Clark products and specifications are subject to improvements and changes without notice.

Industrial Truck Division
Battle Creek, Michigan

GAS/DIESEL/ELECTRIC FORK LIFTS
ELECTRIC NARROW AISLE TRUCKS
ELECTRIC HAND TRUCKS/STRADDLE CARRIERS
TOWING TRACTORS/COMPLETE LINE OF HANDLING DEVICES

SS 2251 66615MC

PRINTED IN U.S.A.

INDUSTRIAL TRUCK DIVISION

SPECIFICATIONS FOR EC60

GENERAL:

Type of vehicle..... Electric Rider
Overall length with forks ..... 123 1/4 inches
Overall length without forks... 79 1/4 inches
Overall width..... 44 inches
Overall height with 130" MFH upright.....
.... 83" Lowered, 179" Raised

Single Drive:

Tread drive tires..... 35 inches
Tread steer tires..... 32 1/2 inches
Basic aisle for right angle stacking (add length of load) ..... 89 3/4 inches
Turning radius, outside ..... 74 1/2 inches
Turning radius, inside ..... 3 inches
Ground clearance - under counterweight .....
..... 4 5/8 inches
Ground clearance - under rear axle .. 3 inches
Ground clearance - under front axle .. 5 inches
Ground clearance - under upright ... 3 7/16 inches
Ground clearance between axles ..... 4 1/2 inches
Grade clearance 40%

Travel Speeds:

Loaded: 1st..... 7.0 MPH
Empty: 1st..... 7.4 MPH

Gradeability:

Loaded 10%

Lifting & Lowering Speeds:

Lift	STANDARD	HI-LO	TRIPLE STAGE	
Loaded	37	33	32	FPM
Empty	55	45	41	FPM
Lower				
Loaded	80	85	85	FPM
Empty	70	60	60	FPM

STEER AXLE:

Axle Alignment:

Toe-In ..... 0 degrees
Camber Angle ..... 1 degree
Caster ..... 0 degrees

Left-hand Turning Radius Angle:

Left wheel ..... 76 degrees
Right wheel ..... 54 degrees

Right-hand Turning Radius Angle:

Left wheel ..... 54 degrees
Right wheel ..... 76 degrees

DRIVE AXLE:

Ratio ..... 4.09 to 1
Differential Capacity ..... 6 Pints
Wheel End Capacity (each end) ... 1 1/4 lbs.

WHEELS AND TIRES:

Size ..... (Front) 21x9x15
Size ..... (Rear) 16x6x10 1/2

SPLIT RIM WHEELS:

Drive Wheel ....450-500 ft. lbs. (Dry Thread)
Steer Wheel .... 275-300 ft. lbs. (Dry Thread)
Steering Gear Pitman Arm Lock Nut Torque.....
..... 120-130 foot pounds
Steering Gear Mounting Bolts and Clamp Bolt Torque 40-50 foot pounds

HYDRAULIC SYSTEM:

Sump Tank Capacity ..... 8 1/4 gallons
Sump Tank Filter (Replaceable) .....
..... 25 micron
Sump Tank Breather (Replaceable) .....
..... 40 micron
Sump Tank Filter Attaching Bolts Torque ....
.... 35 to 45 inch lbs.

Hydraulic Pumps:

Main Pump:

Type ..... Gear Type, Dual Outlet
Capacity .....
Lift 13.3 G.P.M. at 1800 Motor R.P.M.
Tilt 6.0 G.P.M. at 1800 Motor R.P.M.

Steer Pump:

Type ..... Gear Type
Capacity ..... 2.15 G.P.M. at 2000 R.P.M.
System Pressure Relief Valve Setting .....
..... 550 P.S.I.

Hydraulic Valve:

Pressure Relief Valve Setting .....
Tilt 1750 P.S.I.
Lift 1900 P.S.I.

BRAKE SYSTEM:

Type ..... Hydraulic
Brake Pedal Free Travel ...3/8 to 1/2 inches (as measured from top pedal position -to- where pedal meets resistance from the master cylinder)..

BATTERY:- Lead Acid (3x6 Cell Layout) 36 Volts

18 Cell 27 Plate
Exide Types TG(P), TSC

BATTERY CONTINUED:

Gould Types 72x, 85T
K-W Types FH-FK-HT
C & D Types HC, HY (HY Types increase battery comp. eight by 3").

TORQUE VALUES:

Axle Mounting Ring Bolts ..... 650-700 lb.ft.
Handwheel to Steer Gear Shaft Nut.. 35-40 lb.ft.
CTWT to Spacer MTG Bolts ..... 650-700 lb.ft.
Axle End to Adaptor Bolt ..... 250-270 lb.ft.
Axle End to Adaptor Stud ..... 180-200 lb.ft.
Axle End to Adaptor Stud Nuts .. 180-200 lb.ft.
Steer Axle MTG Bolts, Silent Block to Axle .. .. 130-180 lb.ft.
Motor MTG Bracket to Motor & Frame Bolts .... 250-300 lb.ft.

SPEEDS AND GRADES AT 36 VOLTS:

Travel speed, forward and reverse, loaded - Up to 7.0 m.p.h.
Travel speed, forward and reverse, empty - Up to 7.4 m.p.h.
Gradeability with rated load 10%

Lift Speed, F.P.M.
Standard
Loaded 37
Empty 55
Hi-Lo
Loaded 33
Empty 45
Lowering Speed, F.P.M.
Standard
Loaded 80
Empty 70
Hi-Lo
Loaded 80
Empty 60

POWER SUPPLY:

Lead acid battery in steel trays 36 volt.

18 cells, 25 plate
Exide Types: TG(P), TSC
Gould Types: 72X, 85T
*C & D Types: HC, HY
K - W Types: FH - FK - HT

Battery compartment is designed for top and side removal of battery. The standard compartment size is:

39" W x 30 1/4" L x 23" H
with 39" W x 32 1/2" L x 23" H
and 39" W x 34 3/4" L x 23" H also available.

*HY cells increase battery compartment height 3 inches.

INDUSTRIAL TRUCK DIVISION

SPECIFICATIONS

DIMENSIONAL SPECIFICATIONS

Electric

CLARKLIFT® 70

7,000 pound capacity at 24 inches

CAPACITY CHART*

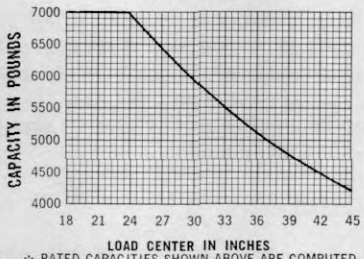

* RATED CAPACITIES SHOWN ABOVE ARE COMPUTED WITH UPRIGHTS IN VERTICAL POSITION. THEY APPLY ONLY ON MAXIMUM FORK HEIGHTS UP TO AND INCLUDING 154"

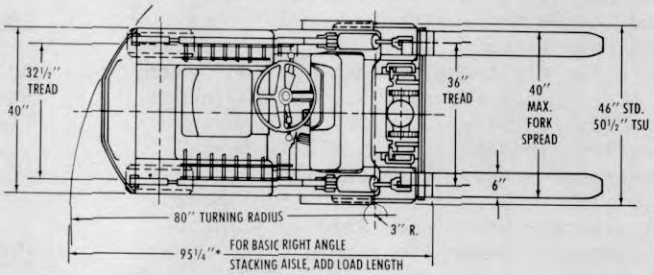

UPRIGHT DIMENSIONAL TABLE

Max. Fork Ht. Std. Hi-Lo	Max. Fork Ht. TSU	Over-all Height Lowered	Free-Lift Std.	Free-Lift Hi-Lo	Free-Lift TSU
75	—	59	19½	35¾	—
81	—	62	19½	38¾	—
87	—	65	19½	41¾	—
93	126	68	19½	44¾	17½
* 99	135	71	19½	47¾	17½
105	*144	74	19½	50¾	17½
111	153	77	19½	53¾	17½
117	162	80	19½	56¾	17½
*123	171	83	19½	59¾	17½
129	*180	86	19½	62¾	17½
135	189	89	19½	65¾	15½
141	198	** 92	19½	68¾	17½
*147	207	** 95	17½	71¾	15½
153	*216	** 99	19½	75¾	17½
159	225	**102	19½	78¾	15½
165	234	**106	19½	82¾	17½
*171	243	**109	19½	85¾	15½
177	—	112	17½	88¾	—
183	—	116	19½	92¾	—
189	—	119	19½	95¾	—
195	—	123	19½	99¾	—
201	—	126	19½	102¾	—

*Preferred standard heights.
**Add 1" for triple stage upright.
For overall height raised add 24¼" to maximum fork height.

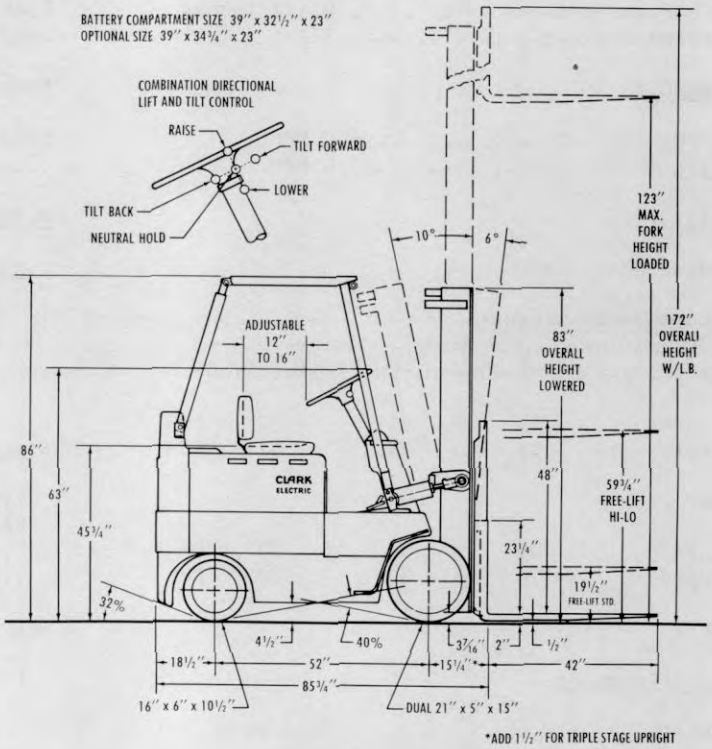

*ADD 1½" FOR TRIPLE STAGE UPRIGHT

CERTIFIED BY CLARK ENGINEERING DEPT.

NOTE: Clark products and specifications are subject to improvements and changes without notice.

Industrial Truck Division
Battle Creek, Michigan

GAS/DIESEL/ELECTRIC FORK LIFTS
ELECTRIC NARROW AISLE TRUCKS
ELECTRIC HAND TRUCKS/STRADDLE CARRIERS
TOWING TRACTORS/COMPLETE LINE OF HANDLING DEVICES

SS 2261 66615MC

PRINTED IN U.S.A.

DEC 68

B082-3

INDUSTRIAL TRUCK DIVISION

SPECIFICATIONS FOR EC70

GENERAL:

Type of vehicle..... Electric Rider
Overall length with forks ..... 127 3/4 inches
Overall length without forks... 83 3/4 inches
Overall width..... 46 inches
Overall height with 123" MFH upright.....
.... 83" Lowered, 172" Raised

Dual Drive:

Tread outside front tires.... 41 inches
Tread inside front tires..... 36 inches
Tread rear tires..... 32 1/2 inches
Basic aisle for right angle stacking (add length of load) ..... 95 1/4 inches
Turning radius, outside ..... 80 inches
Turning radius, inside ..... 3 inches
Ground clearance - under counterweight .....
..... 4 5/8 inches
Ground clearance - under rear axle .. 3 inches
Ground clearance - under front axle .. 5 inches
Ground clearance - under upright ... 3 7/16 inches
Ground clearance between axles ..... 4 1/2 inches
Grade clearance 32%

Travel Speeds:

Loaded: 1st..... 6.9 MPH
Empty: 1st..... 7.4 MPH

Gradeability:

Loaded 10%

Lifting & Lowering Speeds:

Lift	STANDARD	HI-LO	TRIPLE STAGE	
Loaded	35	31	30	FPM
Empty	55	45	41	FPM
Lower				
Loaded	80	80	80	FPM
Empty	70	60	60	FPM

STEER AXLE:

Axle Alignment:

Toe-In ..... 0 degrees
Camber Angle ..... 1 degree
Caster ..... 0 degrees

Left-hand Turning Radius Angle:

Left wheel ..... 76 degrees
Right wheel ..... 54 degrees

Right-hand Turning Radius Angle:

Left wheel ..... 54 degrees
Right wheel ..... 76 degrees

DRIVE AXLE:

Ratio ..... 4.09 to 1
Differential Capacity ..... 6 Pints
Wheel End Capacity (each end) ... 1 1/4 lbs.

WHEELS AND TIRES:

Size ..... (Front) ..... 21x5x15 (Dual)
Size ..... (Rear) 16x6x10 1/2

SPLIT RIM WHEELS:

Drive Wheel ....450-500 ft. lbs. (Dry Thread)
Steer Wheel .... 275-300 ft. lbs. (Dry Thread)
Steering Gear Pitman Arm Lock Nut Torque.....
..... 120-130 foot pounds
Steering Gear Mounting Bolts and Clamp Bolt Torque 40-50 foot pounds

HYDRAULIC SYSTEM:

Sump Tank Capacity ..... 8 1/4 gallons
Sump Tank Filter (Replaceable) .....
..... 25 micron
Sump Tank Breather (Replaceable) .....
..... 40 micron
Sump Tank Filter Attaching Bolts Torque ....
.... 35 to 45 inch lbs.

Hydraulic Pumps:

Main Pump:

Type ..... Gear Type, Dual Outlet
Capacity .....
Lift 13.3 G.P.M. at 1800 Motor R.P.M.
Tilt 6.0 G.P.M. at 1800 Motor R.P.M.

Steer Pump:

Type ..... Gear Type
Capacity ..... 2.15 G.P.M. at 2000 R.P.M.
System Pressure Relief Valve Setting .....
..... 550 P.S.I.

Hydraulic Valve:

Pressure Relief Valve Setting .....
Tilt 1750 P.S.I.
Lift 1900 P.S.I.

BRAKE SYSTEM:

Type ..... Hydraulic
Brake Pedal Free Travel ...3/8 to 1/2 inches (as measured from top pedal position -to- where pedal meets resistance from the master cylinder)..

BATTERY:- Lead Acid (3x6 Cell Layout) 36 Volts

18 Cell 29 Plate
Exide Types TG(P), TSC

BATTERY CONTINUED:

Gould Types 72x, 85T
K-W Types FH-FK-HT
C & D Types HC, HY (HY Type increase battery comp. height by 3").

TORQUE VALUES:

Axle Mounting Ring Bolts ..... 650-700 lb.ft.
Handwheel to Steer Gear Shaft Nut.. 35-40 lb.ft.
CTWT to Spacer MTG Bolts ..... 650-700 lb.ft.
Axle End to Adaptor Bolt ..... 250-270 lb.ft.
Axle End to Adaptor Stud ..... 180-200 lb.ft.
Axle End to Adaptor Stud Nuts .. 180-200 lb.ft.
Steer Axle MTG Bolts, Silent Block to Axle .. .. 130-180 lb.ft.
Motor MTG Bracket to Motor & Frame Bolts .... 250-300 lb.ft.

SPEEDS AND GRADES AT 36 VOLTS:

Travel speed, forward and reverse, loaded - Up to 6.9 m.p.h.
Travel speed, forward and reverse, empty - Up to 7.4 m.p.h.
Gradeability with rated load 10%

Lift Speed, F.P.M.
Standard
Loaded 35
Empty 55
Hi-Lo
Loaded 31
Empty 45
Lowering Speed, F.P.M.
Standard
Loaded 80
Empty 70
Hi-Lo
Loaded 80
Empty 60

POWER SUPPLY:

Lead acid battery in steel trays 36 volt.

18 cells, 29 plate
Exide Types: TG(P), TSC
Gould Types: 72X, 85T
*C & D Types: HC, HY
K - W Types: FH - FK - HT

Battery compartment is designed for top and side removal of battery. The standard compartment size is:

39" Wx 34 3/4" L x 23" H
with 39" W x 32 1/2" L x 23" H also available.

*HY cells increase battery compartment height 3 inches.

INDUSTRIAL TRUCK DIVISION

NEW MACHINE 50 HOUR SERVICE AND INSPECTION

Axle Adapter Level Check	100H 073
Battery, Terminals, Cables, Receptacles Inspect	8H 473
Brake Pedal Free Travel , Check and Adjust	100H 302
Brakes, Master Cylinder Level Check	100H 303
Brake Interlock Switch Check and Adjust	100H 273
Carbon Pile Actuator and Accumulator, Check and Adjust	1000H 174
Contactor Panel, Switchettes, Check and Adjust	100H 673
First Point of Power Switch, 2MS Switch Check and Adjust	100H 475
Hydraulic Oil Filter, Change	500H 173
Lift Chain, Adjust	100H 403
Lubricate Machine	100H 773
Nuts, Bolts and Capscrew, Tighten	500H 072
Pressure Check Main Hydraulic System	1000H 1507
Pump Control Switches Adjust	100H 473
Seat Safety Brake Switch, Check and Adjust	100H 273
Seat Safety Brake Linkage, Check and Adjust	1000H 1172
Speed Control Cylinder, Level Check	100H 173
Steering Gear, Level Check	100H 603

N O T E

PERFORM THIS SERVICE AND INSPECTION AFTER THE FIRST 50 HOURS OF OPERATION ON NEW MACHINES.

Plate 7543. Overall Controls

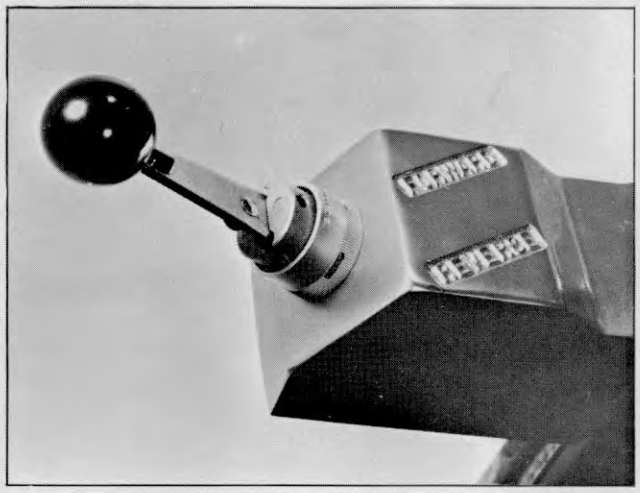

Plate 7216. Directional Control Lever

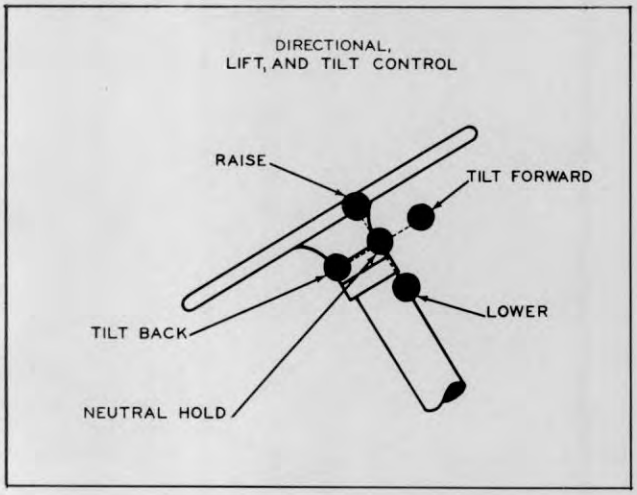

Plate 4448. Hydraulic Control Lever

Plate 7388. Battery Charge Indicator

With the key switch in the "on" position the battery charge indicator will show the available battery voltage. When the indicator needle registers in the red portion of the indicator scale the battery should be recharged. It is recommended that at this time a specific gravity test be taken with a hydrometer to more accurately determine battery condition.

Plate 7162. Hour Meter

The hour meter accurately records the actual hours of machine operation. This will serve as an aid in determining the time intervals for lubrication and preventative maintenance services.

TO OPERATE MACHINE:

1. When the driver's seat is occupied, the seat safety brake (deadman brake) will be released.

2. Place directional control lever in neutral position.

3. Turn switch key to the "on" position, allow accelerator pedal and brake pedal to assume its free or undepressed position.

4. Move the directional lever in position for the desired direction of travel.

5. Depress accelerator pedal as required for the speed desired.

TO STOP MACHINE:

Remove foot from accelerator pedal and depress brake pedal sufficiently to allow a safe smooth stop. If the machine is to be parked, turn switch key to "off" and place directional control lever in neutral (centered) position. When the driver's seat is unoccupied, the (deadman brake) parking brake is applied.

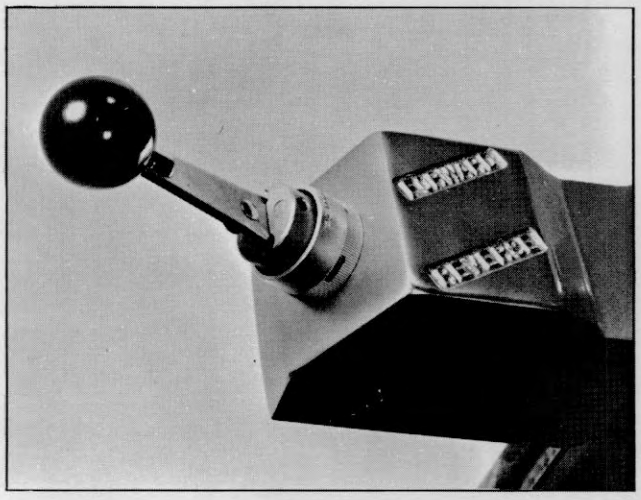

Plate 7216. Directional Control Lever

WARNING

BATTERY POLARITY MUST BE CORRECT OR ELECTRICAL SYSTEM WILL BE DAMAGED.

To Move A Load.

The forks should be adjusted sidewise on the fork bars to obtain firm support and maximum balance of the load. Raise or lower the forks to the proper level and engage the load by driving forward. Tilt the upright backward sufficiently to adequately cradle the load, and raise load sufficiently to clear obstructions. Back away from stack.

The operator should have clear vision ahead when moving in a forward direction. When this is not possible, the operator should drive in reverse and turn in his seat to obtain clear vision backward.

When the load is to be deposited, enter the area squarely, especially when placing one load on top of another, in order that all piles will be square and secure. Place load directly over desired area and slowly lower into position. Disengage forks from the load by using necessary lift-tilt and then back away.

Loads will vary in size, shape, method of *packaging, stacking procedures, etc. The best* way to handle a load will depend on these factors. If in doubt, consult with your supervisor.

IMPORTANT

EVERY 8 OPERATING HOURS (OR EVERY SHIFT) ELEVATE UPRIGHT TO THE UPPER LIMIT. THIS WILL PROVIDE LUBRICATION TO THE TOP PORTION OF THE LIFT CYLINDER. CHECK FOR NORMAL SEQUENCE OF OPERATION.

OPERATING SAFETY RULES AND PRACTICES.

1. Operators of powered industrial trucks should be physically qualified. An examination should be made on an annual basis and include such things as field of vision, hearing, depth perception and reaction timing.

2. Only trained and authorized operators should be permitted to operate a powered industrial truck. Methods should be devised to train operators in the safe operation of powered industrial trucks. It is recommended that badges or other visual indication of the operator's authorization should be displayed at all times during work period.

GENERAL.

1. Safeguard the pedestrians at all times. Do not drive a truck up to anyone standing in front of a bench or other fixed object.

2. Do not allow anyone to stand or pass under the elevated portion of any truck, whether loaded or empty.

3. Unauthorized personnel should not be permitted to ride on powered industrial trucks. A safe place to ride should be provided where riding of trucks is authorized.

4. Do not put arms or legs between the uprights of the mast or outside the running lines of the truck.

5. When leaving a powered industrial truck unattended, load engaging means should be fully lowered, controls should be neutralized, power shut off, brakes set, key or connector plug removed. Block wheels if truck is parked on an incline.

6. Maintain a safe distance from the edge of ramps or platforms and do not, while on any elevated dock or platform, push freight cars. Do not use trucks for opening or closing freight doors.

7. *Have brakes set and wheel blocks in place* to prevent movement of trucks, trailers, or railroad cars while loading or unloading. Fixed jacks may be necessary to support a semi-trailer during loading or unloading when the trailer is not coupled to a tractor. Check the flooring of trucks, trailers, and railroad cars for breaks and weakness before driving onto them.

8. Be sure of sufficient headroom under overhead installations, lights, pipes, sprinkler system, etc.

9. Use an Overhead Guard and Load Backrest Extension unless conditions prevent their use.

WARNING

AN OVERHEAD GUARD IS INTENDED TO OFFER PROTECTION FROM THE IMPACT OF SMALL PACKAGES, BOXES, BAGGED MATERIAL, ETC., REPRESENTATIVE OF THE JOB APPLICATION, BUT NOT TO WITHSTAND THE IMPACT OF A *FALLING CAPACITY LOAD.*

10. Use only approved industrial trucks in hazardous locations.

11. Elevate personnel only on an approved safety platform firmly secured to the lifting carriage and/or forks.

12. Report all accidents involving personnel, building structures, and equipment.

13. Fire aisles, access to stairways, and fire equipment should be kept clear.

TRAVELING.

1. Observe all traffic regulations including authorized plant speed limits. Under normal traffic conditions, keep to the right. Maintain a safe distance, approximately three truck lengths from the truck ahead, and keep the truck under control at all times. Use of truck on public roads should conform to local traffic regulations.

2. Yield the right of way to ambulances, fire trucks, or other vehicles in emergency situations.

3. Do not pass another truck traveling in the same direction at intersections, blind spots, or at other dangerous locations.

4. Slow down and sound horn at cross aisles and other locations where vision is obstructed. If the load being carried obstructs forward view travel with the load trailing.

5. Cross railroad tracks diagonally wherever possible. Do not park closer than 8 feet from center of railroad tracks.

6. Look in the direction of, and keep a clear view of the path of travel.

7. Ascend or descend grades slowly.

When ascending or descending grades in excess of 10%, loaded trucks should be driven with the load upgrade.

Unloaded trucks should be operated on all grades with the load engaging means downgrade.

On all grades the load and load engaging means should be tilted back if applicable, and raised only as far as necessary to clear the road surface.

8. Under all travel conditions the truck should be operated at a speed that will permit it to be brought to a stop in a safe manner.

9. Travel with load engaging means or load low and, where possible, tilted back. Do not elevate the load except during stacking.

10. Make starts, stops, turns or direction reversals in a smooth manner so as not to shift load and/or overturn the truck.

11. Stunt driving and horseplay should not be permitted.

12. Slow down for wet and slippery floors.

13. Before driving over a dockboard or bridgeplate, be sure that it is properly secured. Drive carefully and slowly across the dockboard or bridgeplate and never exceed its rated capacity.

14. Do not run vehicles onto any elevator unless specifically authorized to do so. Approach elevators slowly, and then enter squarely after the elevator car is properly leveled. Once on the elevator, neutralize the controls, shut off power, and set brakes. It is advisable that all personnel leave the elevator before a truck is allowed to enter or leave.

15. Avoid running over loose objects on the roadway surface.

LOADING.

1. Handle only stable or safely arranged loads. When handling off-center loads which cannot be centered, operate with caution.

2. Handle only loads within the rated capacity of the truck.

3. Adjust for long or high (including multiple tiered) loads which may affect capacity.

4. When attachments are used, particular care should be taken in securing, manipulating, positioning, and transporting the load. Operate trucks equipped with attachments as partially loaded trucks when not handling a load.

5. Place load engaging means under the load as far as possible and carefully tilt the mast backward to stabilize the load. Caution should be used in tilting backward with high or segmented loads.

6. Use extreme care when tilting load forward or backward particularly when high tiering. Do not tilt forward with load engaging means elevated except to pick up a load. Do not tilt an elevated load forward except when the load is in a deposit position over a rack or stack. When stacking or tiering use only enough backward tilt to stabilize the load.

OPERATOR CARE OF THE TRUCK.

1. Give special consideration to the proper functioning of tires, horn, lights, battery, controller, lift system (including load engaging means, chains, cable, and limit switches), brakes and steering mechanism. If at any time

OPERATOR CARE OF THE TRUCK (CONT.).

a powered industrial truck is found to be in need of repair, defective, or in any way unsafe, the matter should be reported immediately to the designated authority, and the truck should be taken out of service until it has been restored to safe operating condition.

2. Do not make repairs or adjustments unless specifically authorized to do so.

3. Do not use open flames for checking electrolyte level in storage batteries.

PREVENTIVE MAINTENANCE:

1. Arrange for systematic inspection and lubrication. See that the truck is properly lubricated and in good repair at all times. Refer to pertinent lubrication chart for lubrication instructions.

2. Avoid overloading the truck, as a safety measure against possible injury to the driver and fellow workmen. Overloading also shortens the life of the truck and increases maintenance. Refer to Name (Serial No.) Plate.

3. Take proper care of the battery. Check height of electrolyte solution daily. Never allow the water level to be below the top of the plates. When replacing evaporation, fill cells to proper level only -- overfilling causes loss of acid and reduces capacity. Use only water approved for battery use. Keep top of battery clean and dry at all times. A light coating of vaseline or a light cup grease on the battery terminals will help prevent corrosion. If terminals become corroded, wash off corrosion with a soda and water solution and rise thoroughly. See that the battery is properly charged after each day or shift.

4. Wiring should be checked periodically to make certain all connections are tight and intact.

5. The hydraulic system should be checked periodically for worn hoses, loose fillings and/or leaks, and security of mountings.

6. A periodic check of the brake system should be made for lining wear. Proper brake adjustment should be maintained at all times.

7. Charging equipment should be carefully maintained. Maintenance, operation, and service of charging equipment should be carried out in accordance with the battery manufacturers instructions.

CHANGING AND CHARGING STORAGE BATTERIES:

N O T E

The two types of batteries in common use are (1) lead and (2) nickel-iron. They contain corrosive chemical solutions, either acid or alkali, and therefore present a chemical hazard. On charge, they give off hydrogen and oxygen which, when mixed with air in certain concentrations, may be explosive. They are of relatively small bulk and great weight making handling a special consideration.

1. Battery charging installations should be located in areas designated for that purpose. Facilities should be provided for flushing and neutralizing spilled electrolyte, for fire protection, for protecting charging apparatus from damage by trucks, and for adequate ventilation for dispersal of fumes from gassing batteries.

2. When racks are used for support of batteries, they should be made of materials not conducive to spark generation or be coated or covered to achieve this objective.

Handling Batteries:

1. A conveyor, overhead hoist, or equivalent material handling equipment should be provided for handling batteries.

2. Chain hoists should be equipped with load-chain containers. When hand hoist is used, uncovered batteries should be covered with a sheet of plywood or other non-conducting material to prevent the hand chain from shorting on cell connectors or terminals. A properly insulated spreader bar should be used with any overhead hoist.

3. Reinstalled batteries should be properly positioned and secured in the truck.

4. A carboy tilter or shiphon should be provided for handling electrolyte. Always pour acid into water; not water into acid. Personnel maintaining batteries should wear protective clothing such as face shield, long sleeves and gauntlet gloves.

5. Electrical installations should conform to the National Electrical Code (NEPA No. 70; USA Standard C1-1965) and any local ordinances.

6. Trained and authorized personnel should change or charge batteries.

7. Trucks should be properly positioned and brake applied before attempting to change or charge batteries.

8. When charging batteries, the vent caps should be kept in place to avoid electrolyte spray. Care should be taken to assure that vent caps are functioning. The battery (or compartment) cover (s) should be open to dissipate heat.

9. Smoking should be prohibited in the charging area.

10. Precautions should be taken to prevent open flames, sparks, or electric arcs in battery charging areas.

11. Tools and other metallic objects should be kept away from the top of uncovered batteries.

INDUSTRIAL TRUCK DIVISION

LUBRICATION AND PREVENTIVE MAINTENANCE INDEX

8 HOURS

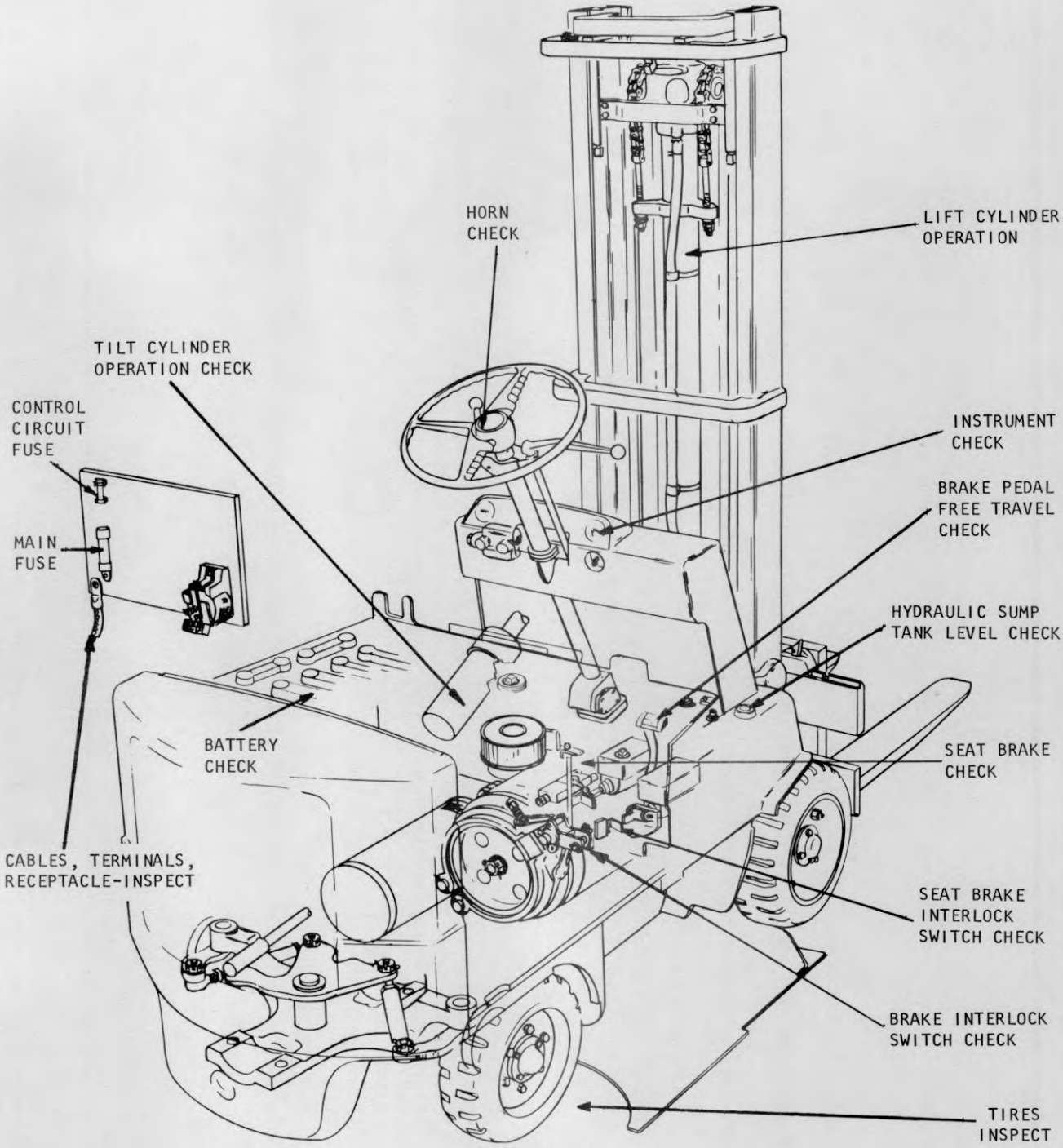

N O T E

AFTER EACH 8 HOURS OF OPERATION, PERFORM THE ABOVE SERVICES.

Plate _____ Lubrication and Preventive Maintenance Illustration

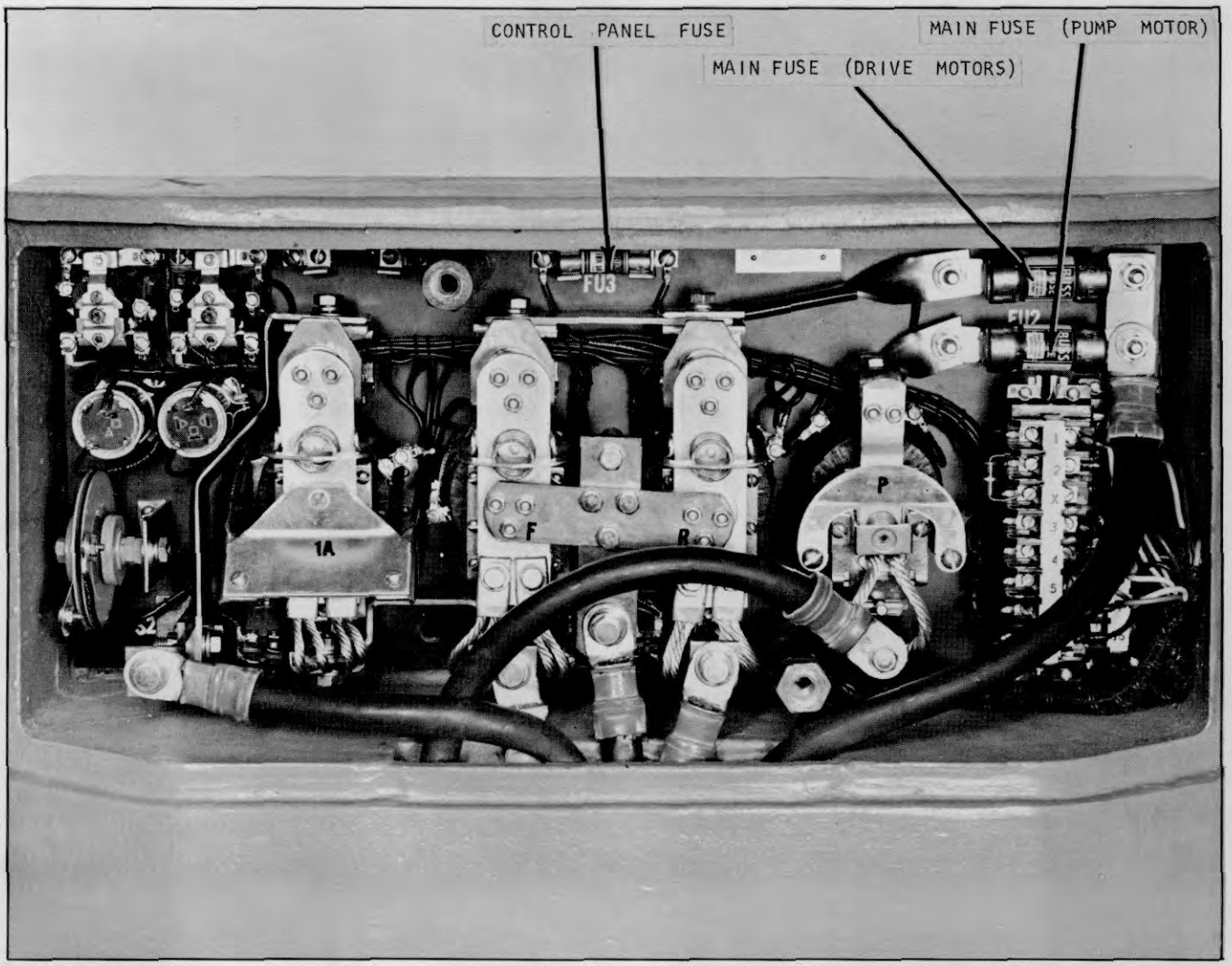

Plate 7544. System Fuses

HORN

Check to be sure the horn is working properly.

LIGHTS (MACHINES SO EQUIPPED)

Check all lights to see if they are functioning properly.

SYSTEM FUSES

Control Panel Fuse ..... FU3 (10 amp)

Main Fuse (two required) (Drive Motor)..... ..... FU1 (400 amp)
(Pump)..... ..... FU2 (400 amp)

Plate 7388. Battery Charge Indicator

With the key switch in the "on" position the battery charge indicator will show the available battery voltage. When the indicator needle registers in the red portion of the indicator scale the battery should be recharged. It is recommended that at this time a specific gravity test be taken with a hydrometer to more accurately determine battery condition.

Plate 7162. Hour Meter

The hour meter accurately records the actual hours of machine operation. This will serve as an aid in determining the time intervals for lubrication and preventative maintenance services.

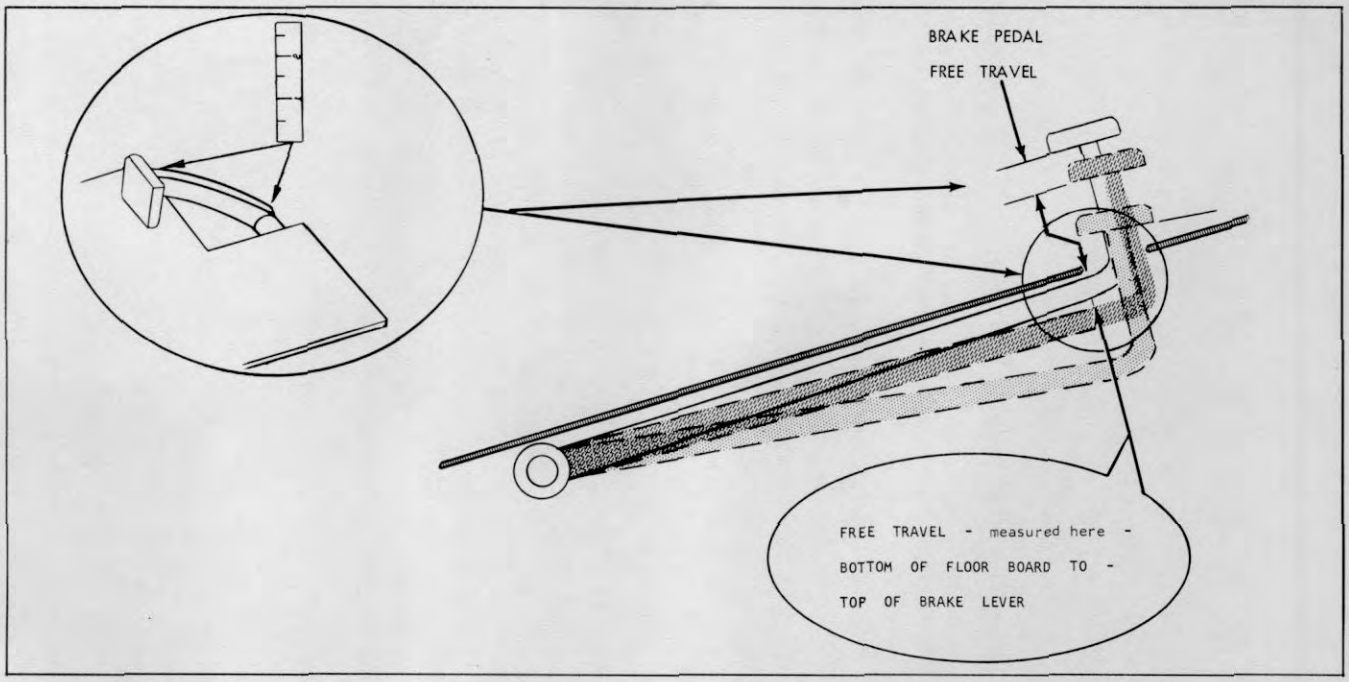

Plate 6630. Brake Pedal Free Travel

BRAKE PEDAL

1. Depress brake pedal and hold foot pressure for at least ten seconds. Pedal must be solid, must not be spongy or drift under foot pressure.

2. Brake pedal should have 3/8" to 1/2" free travel. Depress pedal by hand. When pedal meets resistance from the master cylinder, the distance traveled should be as specified. If Pedal Free travel is incorrect, refer to the Index for adjustment procedures.

PARKING BRAKE

N O T E

BRAKE EFFECTIVENESS SHOULD BE TESTED WITH TRUCK POWER OFF, SEAT LINKAGE DISCONNECTED AT LINKAGE PIN AND DRIVER OCCUPYING DRIVER'S SEAT.

Parking Brake Effectiveness - must be capable of holding the truck, with full rated load, on a 15% grade.

If brake operation is not satisfactory, report to designated person in authority.

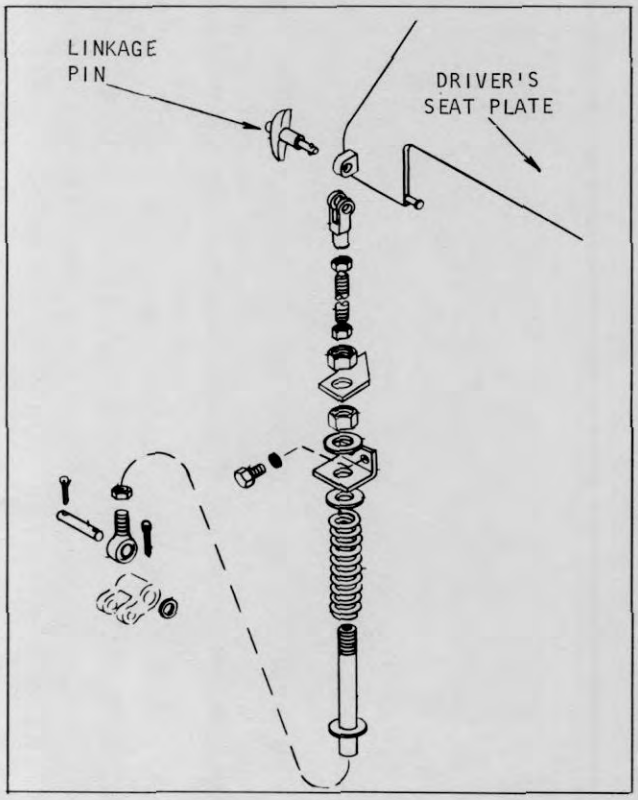

Plate 7548. Parking Brake Linkage

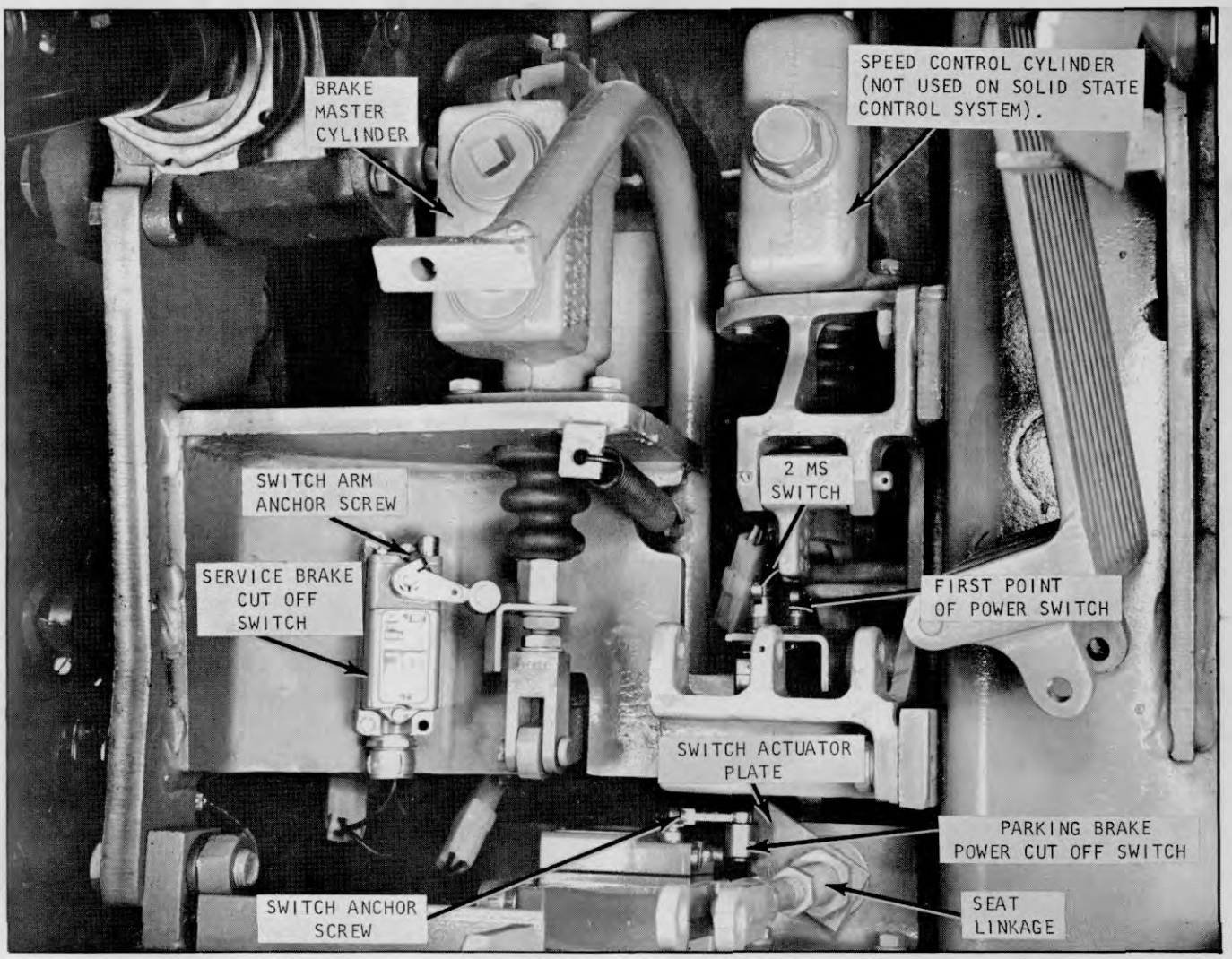

Plate 7545. Parking Brake (Deadman) Power Cut Off Switch; check Service Brake (Interlock) Power Cut Off Switch - Typical Illustration

PARKING BRAKE POWER CUT OFF SWITCH

The normally open switch must be closed by the switch operating arm provided in the seat brake linkage when the rubber seat support bumpers are 2 to 3 inches from the top of the hood; that is, in the last 2 or 3 inches of movement of the seat to the occupied position.

SERVICE BRAKE POWER CUT OFF SWITCH

The switch must open within the pedal free travel; that is, switch must cut all electrical power before the service brakes actuate or start to apply.

Depressing brake pedal will cause the (interlock switch) service power cut off switch to open a circuit, cutting all power to the drive motor. This prevents the possibility of trying to drive and brake the truck at the same time.

BATTERIES - LEAD-ACID

The lead-acid battery has a lead peroxide positive plate, a sponge lead negative plate, and the electrolyte is a solution of sulphuric acid.

The battery does not store electricity. When the battery is connected to an electrical circuit, a chemical reaction starts inside the battery. This chemical action produces lead sulphate on both the positive and negative plates, and the chemical actions produces the electric current through the electrical circuit. This action continues only as long as the circuit is complete from negative pole to the positive pole. As the battery plates become coated with lead sulphate the voltage output of the battery decreases. When both the positive and negative plates have become thoroughly coated with lead sulphate, both plates act alike (or like similar metals). This causes the current to stop flowing.

When the point is reached where the battery is discharged, the battery must be charged. Charging is accomplished by connecting the battery to a direct current source in such a manner that the electricity flows through the battery in the opposite direction of the normal battery current.

BATTERY LIFE

Economical and efficient operation of the electric fork lift truck depends, to a great extent, upon the efficiency and life of the battery.

During the operation of the fork lift truck, many things occur which, if not corrected or prevented, can greatly reduce the life of the battery.

The operator should be acquainted with the limits, capacities and capabilities of his truck. He should know the correct point of power to use to move all loads up to the rated capacity of the truck.

Batteries are rated in ampere hours over a set period of time, and should be of a proper size for the particular work intended. Extending the work means overdischarging the battery. This will greatly shorten its life. Overcharging the battery by using too high a rate of charge, will cause it to gas vigorously after it has reached its fully charged state and will also shorten its life.

If service requirements demand only partial discharge of the battery, it is unnecessary to recharge following each partial discharge. When the hydrometer reading indicates the battery is 75% discharged, (approximately 1130 specific gravity) arrangements should be made to recharge.

Controlling the "charge" and "discharge" of the battery is a very important contributing factor in determining battery life.

The discharge of a battery can be controlled in several ways.

Batteries are rated according to the job for which they are being used. A fully charged battery is capable of doing a certain amount of work or lasting a certain length of time in a specific service. With information of this type, a schedule or duty cycle can be worked out and the batteries can be changed or serviced with very few failures.

Experienced operators can tell from the action of the truck, when the battery is reaching the point where it should be charged or changed. Prompt action in seeing that the battery is serviced at this time can result in longer battery life.

Several "meters" or "indicators" are available for use on battery powered trucks. These indicators show the operator the state of charge of the battery, how much useful power is left in the battery, or just simply warns the operator when the battery should be charged.

MAINTENANCE

Keep the "tops" of the battery clean and dry at all times. Normally wiping the top of the battery with a damp cloth is sufficient. If the battery is removed from the truck, it can be hosed off with clean water. If electrolyte is spilled, it will not dry off. Neutralize the acid with a solution of ordinary "bicarbonate of soda" and rinse thoroughly with clean water.

A light coating of vasoline or a light cup grease on the terminals will help prevent corrosion. If the terminals have become corroded, wash off the corrosion with a soda solution and rinse thoroughly.

The vent plugs should be in place at all times when using, cleaning, and charging the battery. They should be cleaned weekly by immersing in a bucket of clean water for one half hour. Check the vent holes in the vent plugs and clean out.

The vent holes must be open to allow gas to escape from the cell.

The batteries should be numbered and assigned to a given truck. A record should be kept of (1) daily hydrometer reading on a pilot cell at the beginning of each charging, (2) a weekly reading of the pilot cell after charge, and (3) a hydrometer reading of all cells and temperature of one cell each "4" months before and after charging. When battery shows nonuniformity of these readings and an inability to work through a shift, it is an indication that replacement is necessary.

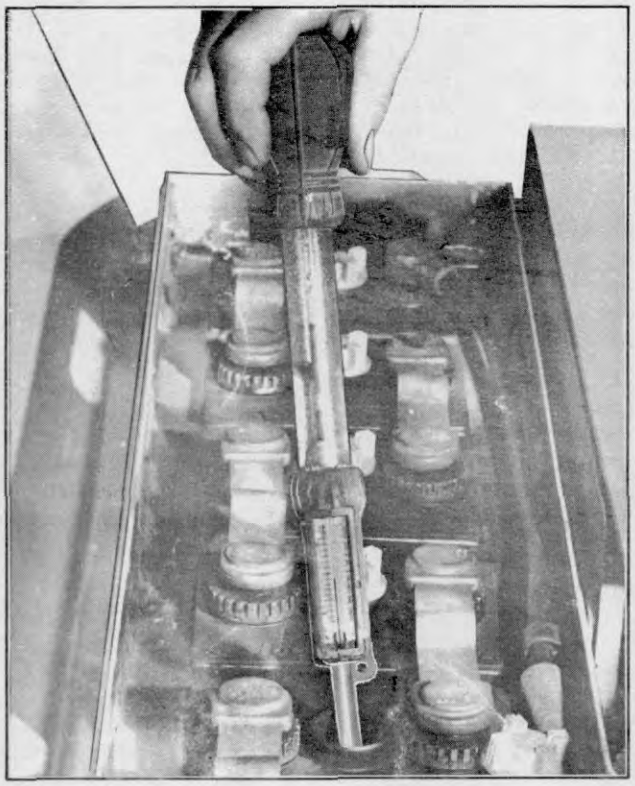

Plate 4018. Hydrometer Check Method

TWO-RATE CHARGING

"Two-Rate" charge, as the name implies, consists of two average rates. A "high" rate is provided at the beginning of the charge, while, toward the end of the charge, this is automatically changed to a "low" rate. (In actual operation, both high and low-rate is obtained in modern charging equipment by the use of a voltage relay in a rate charging circuit). When the battery cell voltage rises to approximately 2.37 volts per cell, at 77° F., the voltage relay automatically lowers the charging rate. The same voltage relay operating with a time switch can also be used to stop the charge automatically.

"Two-Rate" charging is generally used with rectifiers, although it is also used with a generator when the voltage is too high for the taper charge. For dependable, day-in and day-out repeat performance, the quality of the voltage relay and time switch is important.

TAPER-CHARGING

The "Taper" charge (Modified constant potential) is obtained inherently (a natural characteristic) in a circuit design by balancing the charging voltage source against the battery voltage rise during charge. As the battery voltage rises, it approaches the value of the charging source and hence, there is less difference between the charging source and battery voltage. As a consequence, the flow of charging current will taper off in value opposite to the way the battery voltage rises.

"Taper" charge requires a close tolerance (plus or minus 3%) of charging source voltage (2.63 times the number of cells) when more than one charge circuit is on the same machine. A single circuit taper charge does not need this close voltage limit as the inherent taper is obtained as a natural part of the shunt generator load characteristic.

However, taper charge circuits are specifically designed for a definite number of cells, in the battery, to achieve the inherent taper. The only duty performed by a voltage relay time switch control, on the taper circuit, is to stop the charge.

NICKEL-IRON-ALKALINE STORAGE BATTERIES

The alkaline storage battery is known as the "nickel-iron-alkaline type" because nickel oxide is used in the positive elements, and iron in the negative elements; while the electrolyte is an alkaline solution containing potash and lithia.

TYPE AND SERIES

Each cell bears a distinguishing type letter and size number plainly stamped upon the cover. A serial number, just under the type letter and size number combination, denotes date of manufacture. All cells having the same type letter are similar in operating characteristics and

are made from the same class of plates and size. Therefore, the capacity of the cell simply varies with the number of plates. The "size number" indicates the number of positive plates. The total number of positive and negative plates is one more than twice the size number.

INSPECTION ON RECEIPT

Alkaline batteries are shipped in either a "charged" or "discharge" condition. The cells shipped charged, are intended for service within a short time without further charging. If the cells are not put into service within a month, it will be found advisable to charge one or two hours before using.

A red label, included with the battery in each shipment, indicates that the cells are charged ready for immediate use on receipt.

A green label, indicates that the cells are in a discharged condition and must be given an extra charging time as specified by the manufacturer.

Upon receipt of the battery, inspect each cell for solution height. Use a glass tube for this purpose. DO NOT use a match or other open flame for inspection.

If electrolyte has been spilled, if plate tops are visible above the surface of the solution, or if the inside of packing case, etc., shows yellowish stains. The loss must be replaced; preferably with Refill Alkaline Storage Battery Solution, or lacking this, with RENEWAL Solution diluted to a specific gravity of 1.215 by the addition of distilled water. The proper height of solution above plate tops is as follows: Cell type is stamped on the cover of each cell.

"A" Type Cells - 1/2"
"C" Type Cells - 1"
"D" Type Cells - 1 1/4"

When the level of solution is only a small amount below the proper height, fill with pure distilled water and in the future, use pure distilled water for replenishing the solution.

CONNECTIONS

The positive pole of an "alkaline cell" is designated by a red bushing around the pole and a plus (+) mark stamped on the cell cover.

The negative pole, is designated by a black bushing around the pole; no designating mark on the cover.

The connections between cells, in a tray, are made of solid wire with lugs on both ends. These are known as "connectors". The flexible, rubber-covered cables used to join trays together are known as "jumpers".

To avoid unnecessary electrical losses, all electrical connections must be tight. (To obtain this, it is necessary to see that all the contact surfaces between the poles and lugs are clean and make good contact.) Remove any Esbaline, grease, or dirt that may stick to the tapered surfaces of the poles or the inside of the lugs before connecting. If necessary, use 00 sandpaper or 00 emery cloth for this purpose. NEVER use a file or anything that will harm the contact surfaces.

A loose or dirty contact on a cell pole will cause excessive heating, and may be detected by touching the connectors after the current has been passing through them for some time.

DISCONNECTING LUG

A "disconnecting jack" or "lug puller" is supplied with each battery. This jack is designed to straddle the connector or jumper lug and, by means of a jack screw, break the lug loose from the cell pole.

CHARGING

Direct current must be used to charge any storage battery. If only alternating current is available, it is necessary to convert to direct current by the use of a motor generator set, mercury arc rectifier, or other suitable form of current rectifier.

An alkaline battery may be charged at either a constant current rate throughout the entire charging period, or at a modified constant potential rate. In either case the average rate should be such that the battery can be brought from a discharged state to full charge within between six and seven hours. In connecting a battery to the charging circuit, always connect the positive terminal to the positive side of the line, and the negative terminal to the negative side of the line.

It is not necessary to take specific gravity reading during charge, as the electrolyte does not change appreciably.

Before starting to charge, see that the solution is at the proper level. If the solution is low, bring it to the proper level by adding pure distilled water as instructed under watering. If the battery is in a compartment, open the cover before starting a charge. DO NOT charge in a hot place or allow the temperature of the solution to exceed 115° Fahrenheit on charge.

CHARGE TEST FORK

The charge test fork was developed to provide an easy means of determining the state of charge of an alkaline battery.

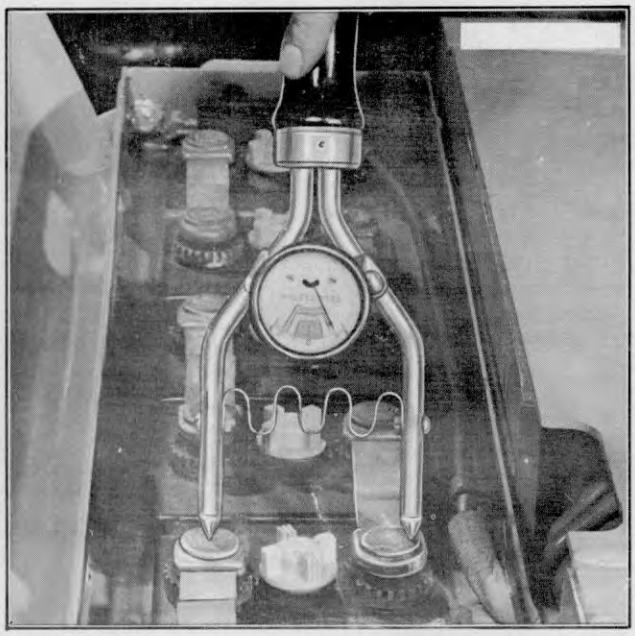

Plate 4008. Charge Test Fork Check

This is done by obtaining a key voltage reading which, on reference to the charts supplied for use with instrument, will indicate the amount of charge necessary to restore the battery to a fully charged condition.

ELECTROLYTE

The specific gravity of the electrolyte in fully charged alkaline cells has a normal operating range of between 1.215 and 1.160, with electrolyte at the proper level and corrected for temperature.

The specific gravity reading of the electrolyte (of an alkaline cell) has no value in determining its state of charge, as the specific gravity does not change during the charging or discharging periods to any marked extent. It, therefore, is only necessary to take infrequent readings, to determine if the specific gravity has dropped to the point where a change of electrolyte is desirable.

There are two kinds of alkaline potash electrolyte which are normally used when a "change" of solution is found necessary. Renewal solution, which has a specific gravity of approximately 1.250; is normally used to replace old electrolyte, the gravity of which has dropped to the low limit ranging between 1.160 and 1.170. Refill solution has a specific gravity of approximately 1.215 and is used to replace spillage. DO NOT use any potash solution other than alkaline electrolyte, as the presence of impurities or improper compounding of such solution may permanently injure your battery.

WATERING CELLS

Before putting a new electric filler into service; see that the tank is washed thoroughly to remove any foreign matter and then rinse tank, hose and filler thoroughly by running distilled water through them. Then fill the tank with distilled water and mount in a convenient place at least four or five feet above the cells to be watered.

To operate, insert the nozzle into the filler opening in the top of the cell. If the solution is already at the proper height, the bell signal will ring. If bell does not ring, start flow of water by opening valve by pushing down lever on filler handle. When the bell rings, remove the nozzle from the cell, close cell filler cap and proceed to next cell.

LAYING UP BATTERY

If battery is to be laid up for any length of time (in excess of one year) be sure that the plates are covered to the proper height with solution and that the battery is discharged and short circuited. The battery should be stored in a cool dry place.

Alkaline batteries are easy to lay up. Merely discharge to zero voltage and short circuit. They may be left standing idle indefinitely, without injury, if stored in this short circuited condition. The battery may be stored for 6 months to a year without discharging and short circuiting.

C A U T I O N S

NEVER put lead battery acid into an alkaline battery or use utensils that have been used with acid; you may ruin the battery.

NEVER bring a "lighted match" other "open flame" near a battery.

NEVER lay a "tool" or any piece of "metal" on a battery. Always keep the filler caps closed except when necessary to have them open for filling as provided for in these instructions.

ALWAYS keep batteries clean and dry externally.

ALKALINE ELECTROLYTE is injurious to the skin or clothing and must be handled carefully. Solution spilled on the person should be immediately washed away with plenty of water.

DO NOT use the electric filler, or fill cells while a battery is on charge.

USE ONLY pure distilled water for watering the battery.

WEAR GOGGLES when cleaning or changing solution.

CABLES, TERMINALS AND BATTERY RECEPTACLE.

Check cables, terminals and receptacle for condition and security of mounting. Correct as necessary.

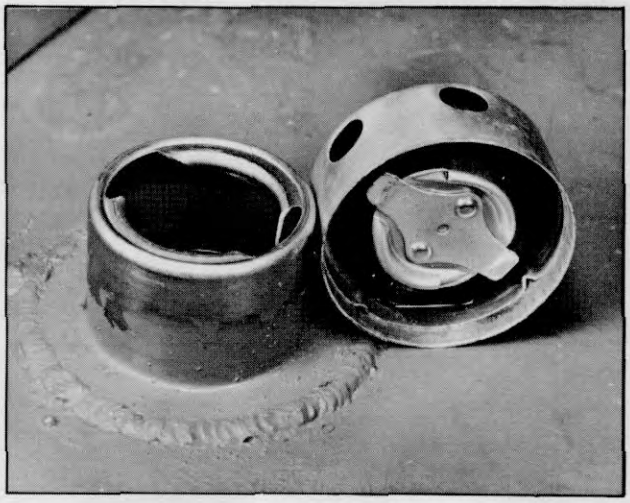

Plate 7046. Typical Hydraulic Sump Tank and Sump Breather

HYDRAULIC SUMP TANK

Check hydraulic sump tank fluid level in the following manner:

1. Lower upright.

2. Turn key switch off.

3. Remove sump breather from R.H. side of machine and fill plug from L.H. side of machine. Fluid level should be within 1 1/2 to 2 inches of the filler hole.

If necessary, fill sump tank with hydraulic fluid per Clark Specifications MS-68. Turn key switch on and operate valve control levers allowing any air in the lines to escape, then recheck sump tank fluid level before putting machine into operation. Replace breather and fill plug to their same locations as when removed.

HYDRAULIC CONTROL LEVERS

I M P O R T A N T

EVERY 8 OPERATING HOURS (OR EVERY SHIFT)

ELEVATE UPRIGHT TO THE UPPER LIMIT. THIS WILL PROVIDE LUBRICATION TO THE TOP PORTION OF THE LIFT CYLINDER.

Check lift and tilt operation. The lift and tilt cylinders should actuate when lift or tilt levers are moved either way from neutral position.

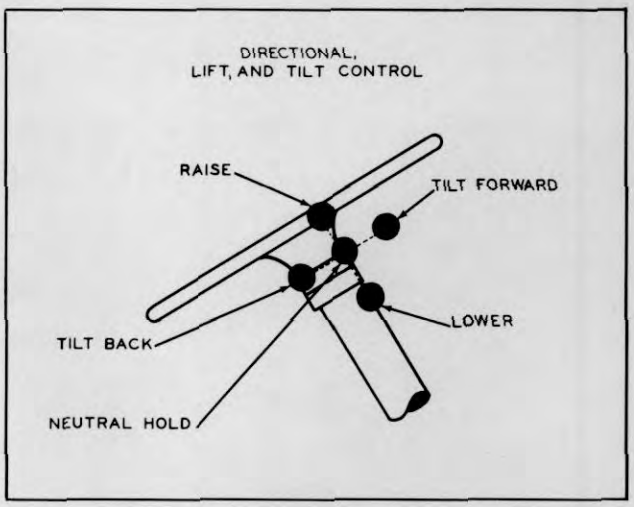

Plate 4448. Lift and Tilt Lever

When load is elevated and control lever returned to neutral position, load should remain in elevated position with no noticeable downward drift. If load drifts downward excessively, this may indicate lift cylinder U-cup or seal damage -- report to designated person in authority.

With tilt lever in neutral position, upright should remain steady with no noticeable backward or forward drift. If upright drifts excessively either way, this may indicate tilt cylinder seal or U-cup damage -- report to designated person in authority.

C A U T I O N

NEVER ALLOW LOADED OR UNLOADED LIFT CARRIAGE TO REMAIN IN AN ELEVATED POSITION FOR ANY PROLONGED PERIODS. LIFT CARRIAGE SHOULD BE LOWERED WHEN NOT IN USE.

DO NOT HOLD CONTROL LEVERS IN EXTREME POSITIONS AFTER A LOAD HAS REACHED ITS LIMITS. TO DO SO WILL RESULT IN HIGH OIL PRESSURE THAT MAY RESULT IN HEATING OF THE HYDRAULIC OIL.

TIRE AND RIM MAINTENANCE

1. Inspect tires regularly - remove all sharp objects picked up by treads before they have a chance to cut further into the rubber and cause chipping or possible separation of the rubber from the base metal.

2. Avoid overloading and do not allow vehicle to stand under heavy loads for prolonged periods as this will cause a "flat" spot on the tires.

3. Check steering axle alignment regularly to protect against fast, irregular tread wear and separation.

4. If rubber tires come in contact with oils, grease, and gasoline they should be wiped off without delay.

5. Regular lubrication of all wheel bearings will assure free-rolling and elimination of tire drag when stopping or starting.

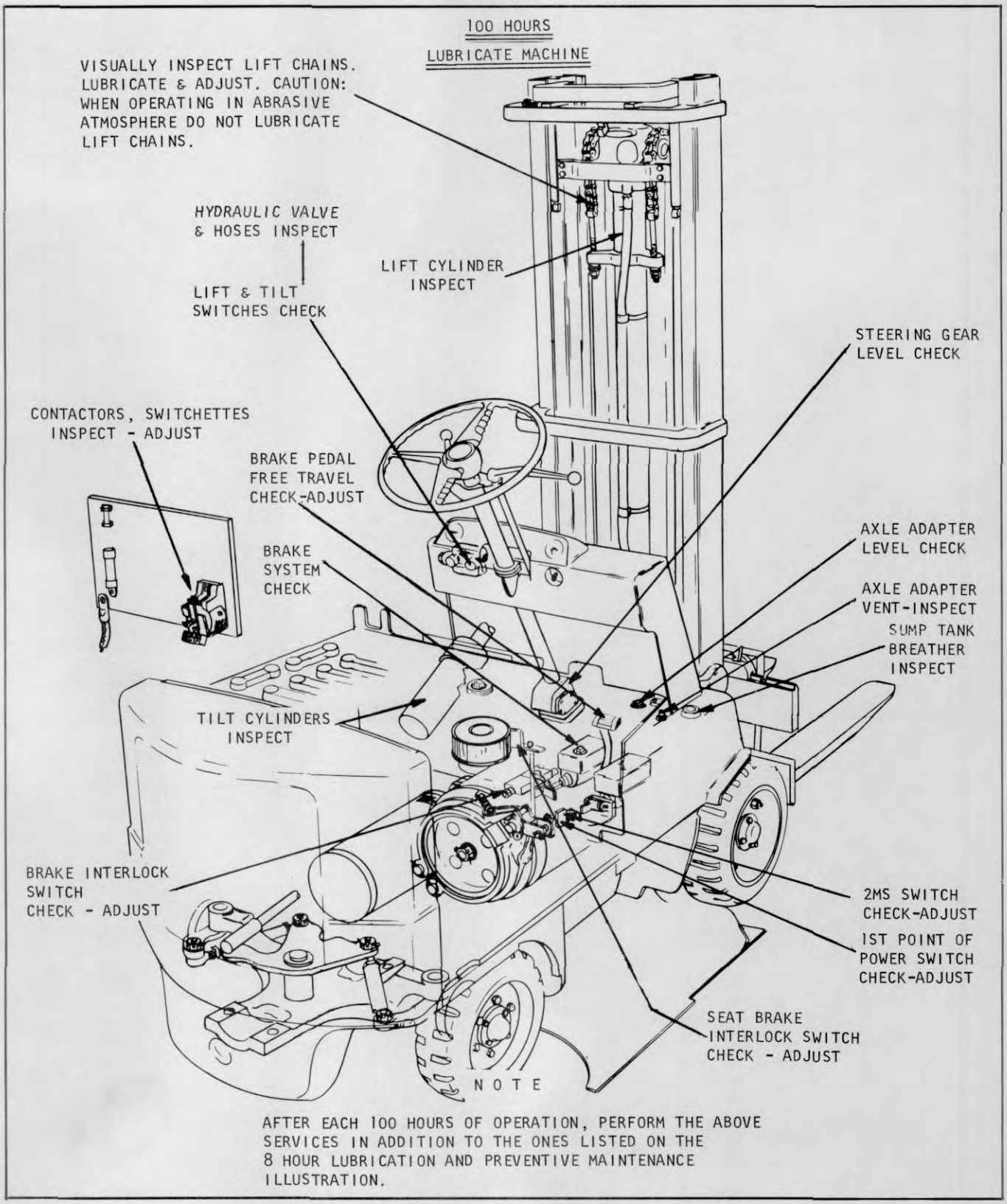

Plate _____ Lubrication and Preventive Maintenance Illustration

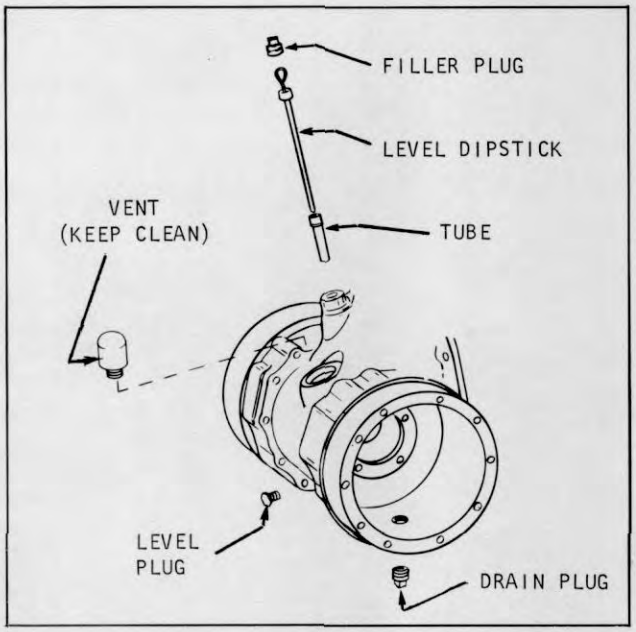

Plate 7549. Typical Axle Adapter

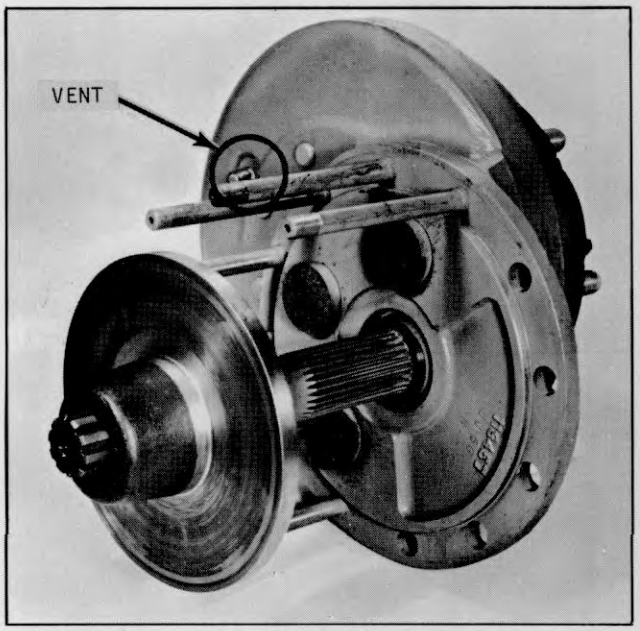

Plate 7550. Typical Axle Adapter Vent

AXLE ADAPTER LUBRICANT LEVEL CHECK

Check lubricant level and fill if necessary. Use Type "A", Suffix "A", Automatic Transmission Fluid (fluid containers must display a qualification number prefixed by "AQ-ATF"...Clark Part Number 879803) or Dexron Automatic Transmission Fluid in all vehicles beginning with the following machine serial number:

EC-----1-831 and above

Use E.P.G.L. S.A.E. #90 Gear Lubricant (Per Clark Specifications MS-8) in all machines built prior to the above listed machine serial numbers.

Clean dirt from around filler plug and remove plug. Fill until level reaches the level of the test plug. DO NOT overfill, as the excess quantity will serve no useful purpose. If the oil level is too high, it will cause excessive oil churning and attendantly high oil temperature and possible leakage.

AXLE ADAPTER VENT

Inspect axle adapter vent to be sure it is free of obstructions. If vent is not open remove and clean in a Stoddard type cleaning solvent. Be sure vent is completely dry before replacing on axle adapter.

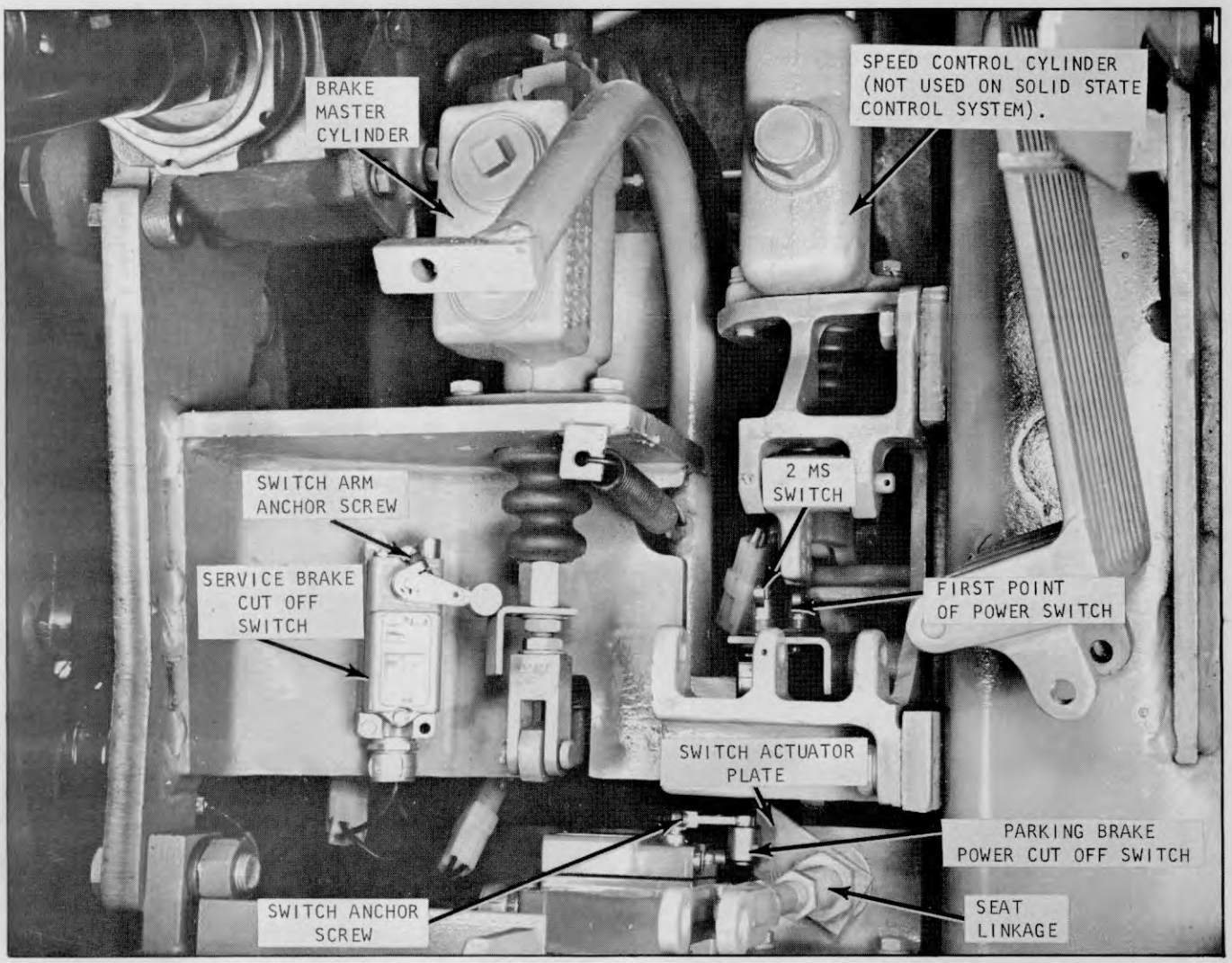

Plate 7545. Parking Brake (Deadman) Power Cut Off Switch; Service Brake Power Cut Off Switch Assy's.

PARKING BRAKE POWER CUT OFF SWITCH

The normally open switch must be closed by the switch operating arm provided in the seat brake linkage when the rubber seat support bumpers are 2 to 3 inches from the top of the hood; that is, in the last 2 to 3 inches of movement of the seat to the occupied position.

If adjustment is necessary, loosen arm retainer screw, move arm as required allowing switch to actuate as previously stated. Tighten arm retainer screw when correct adjustment is obtained.

SERVICE BRAKE POWER CUT OFF SWITCH

The switch must open within the pedal free travel; that is, switch must cut all electrical power before the service brakes actuate or start to apply.

If adjustment is necessary, loosen arm retainer screw. Move arm as required allowing switch to open (actuate) just before service brakes start to apply. Normally, adjusting switch arm to contact the switch actuator plate, with the brake pedal in the released position, will provide correct adjustment. This should be

checked however, to be sure electrical current cuts off before brakes start to apply.

N O T E

DEPRESSING BRAKE PEDAL WILL CAUSE THE (INTERLOCK SWITCH) SERVICE BRAKE POWER CUT OFF SWITCH TO OPEN A CIRCUIT, CUTTING ALL POWER TO THE DRIVE MOTOR. THIS PREVENTS THE POSSIBILITY OF TRYING TO DRIVE AND BRAKE THE TRUCK AT THE SAME TIME.

BRAKE PEDAL FREE TRAVEL

Using a rule, measure pedal free travel at either of the two places shown below.

Depress brake pedal by hand. When pedal meets resistance from the master cylinder, the distance traveled should be 3/8 to 1/2 in. — if free travel is incorrect, adjust as follows:

1. Loosen lock nut, see Plate 7339.

2. Rotate adjuster to obtain specified pedal free travel.

3. Tighten lock nut to hold adjustment.

ACTUATION STROKE

If brake pedal travels beyond this point ------ this indicates either lack of fluid in the master cylinder; air in the system, or the brake linings require replacement.

CLEARANCE - measured here

TOP PEDAL POSITION -TO- WHERE

PEDAL MEETS RESISTANCE FROM

THE MASTER CYLINDER.

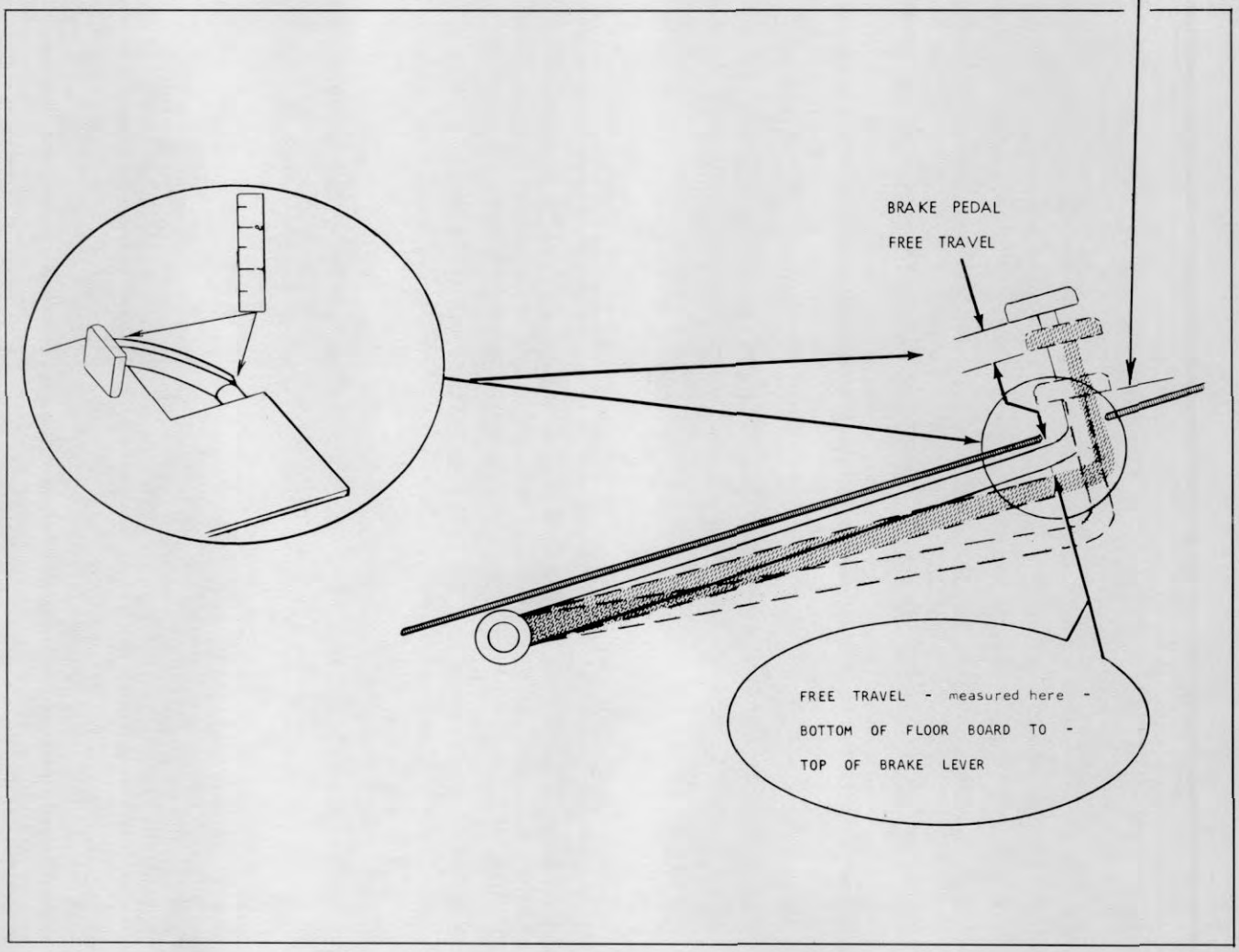

Plate 7042. Brake Pedal Check and Adjustment

BRAKE SYSTEM

Check brake fluid level in the master cylinder. Brake fluid should be within 1/4 inch of the top. Fill with SAE 70 R3 Heavy Duty Brake Fluid. Clark Part Number 1800200.

Master Cylinder Filler Cap Vent Hole: Check cap vent hole for obstruction. Vent hole must be open at all times. Clean if necessary, see Plate 7339.

BRAKE PEDAL

A correctly adjusted brake pedal is important so that the internal ports in the master cylinder are not blocked by the cylinder piston. The following lists two important reasons for proper brake pedal free travel.

Inadequate pedal free travel will block the internal ports so that upon releasing the brake pedal fluid will be trapped in the lines and hold the brake linings in contact with the brake disc or drum, resulting in lining wear and excessive fuel consumption.

Brake Pedal Adjustment: Refer to Plate 7964 on Page 100H 302 and follow the instructions and diagrams.

W A R N I N G

CORRECT BRAKE PEDAL FREE TRAVEL IS IMPORTANT FOR SAFE OPERATING BRAKES.

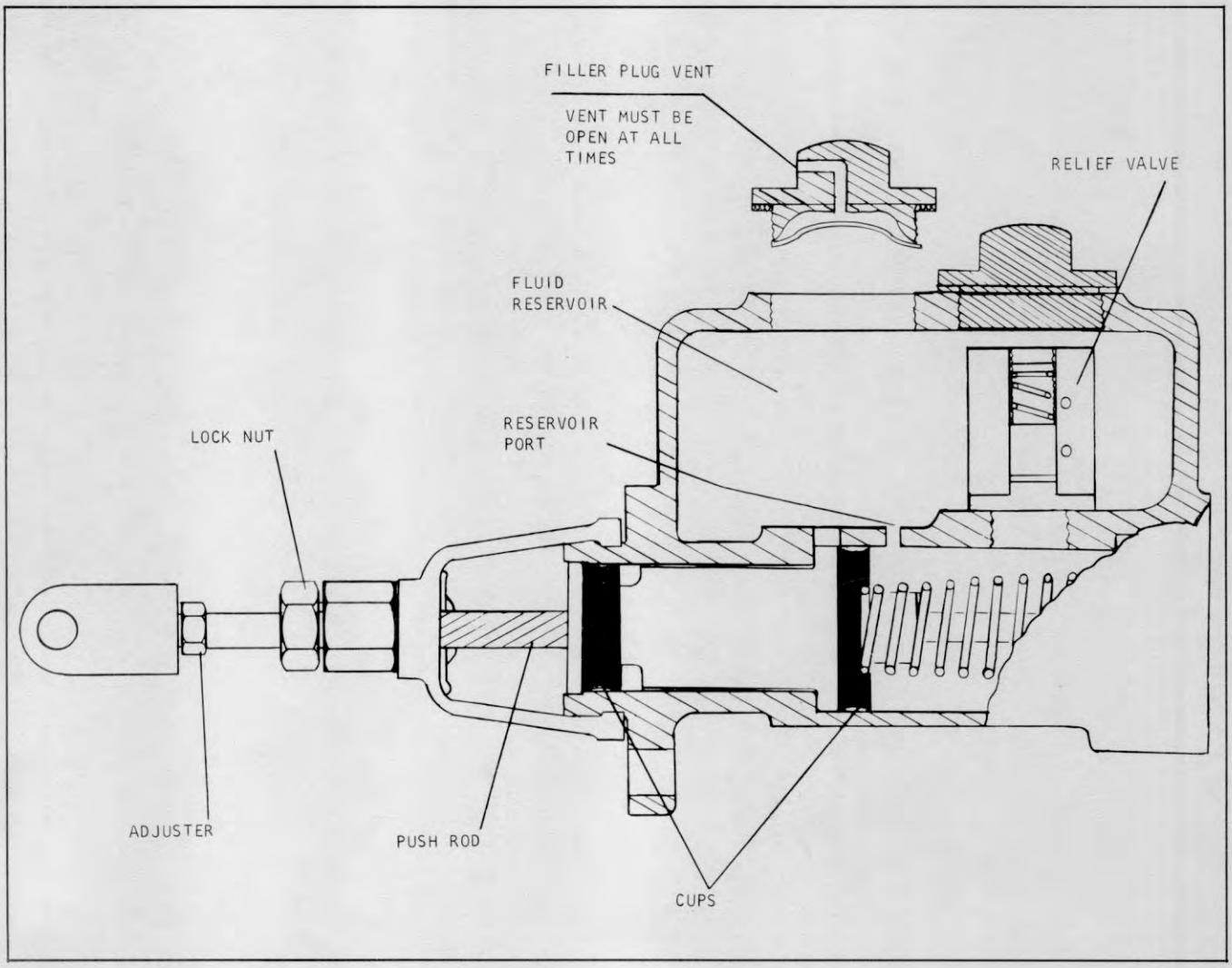

Plate 7339. Brake Pedal Adjustment

LIFT AND TILT CYLINDERS

Check for drift, leakage at packings, damage and security of mountings (Anchor Pivot Pins, Flanges and Mounting Rings).

LIFT CHAINS

The lift chains are mounted to the chain anchors on the lift carriage and at the chain anchor rods near the lift cylinder piston head.

If it becomes necessary to adjust the lift chains place a capacity load on forks (or device if used) and adjust chains so center line of lower carriage roller is at least 1/2" above the bottom end of the innerslide channel. It is important that the chain adjustment be made with a capacity load. In this manner you will allow for chain stretch.

W A R N I N G

KEEP CLEAR OF LOAD DURING ADJUSTMENT TO AVOID INJURY IF ANY MALFUNCTION SHOULD OCCUR AND CAUSE LOAD TO FALL.

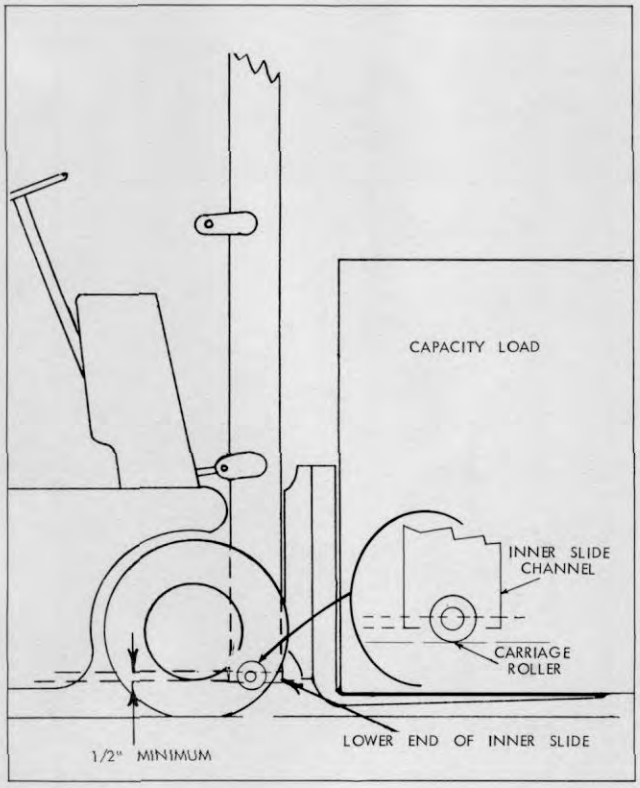

Plate 6884. Lift Chain Adjustment (Place Maximum Load On Forks)

LUBRICATE MACHINE

C A U T I O N

WHEN LUBRICATING THE TRUCK, MAKE A VISUAL INSPECTION OF ALL HYDRAULIC LINES, FITTINGS AND ALL ELECTRICAL WIRING. LUBRICATE ALL MISCELLANEOUS LINKAGE WITH S.A.E. NUMBER 20 OIL.

HYDRAULIC CONTROL VALVE AND LINES

Inspect for damage, leakage and security of mounting.

LIFT BRACKET

Inspect for damage, bent forks etc.

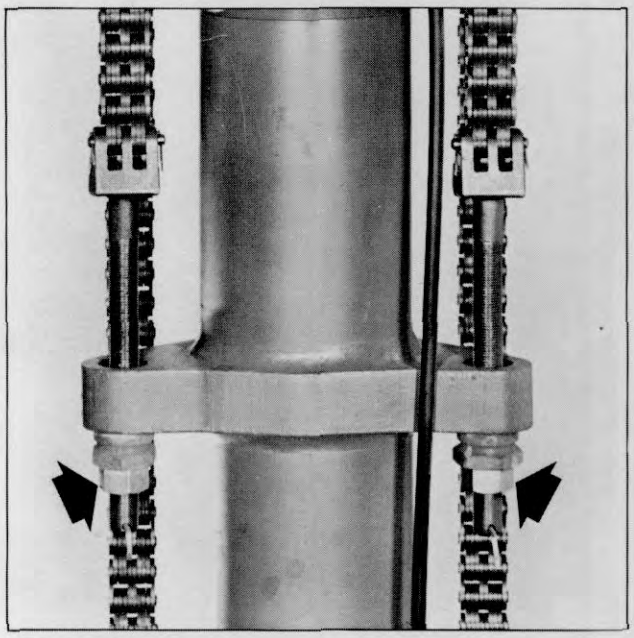

Plate 6634. Lift Chain Adjustment (Chain Anchor Rods)

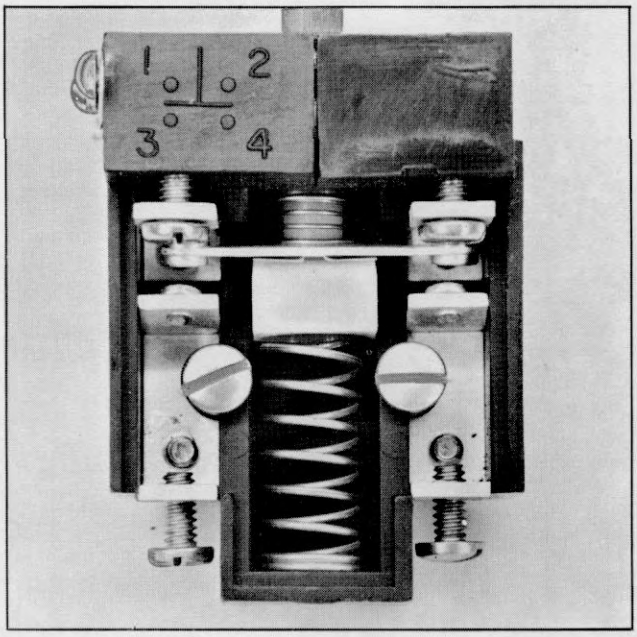

Plate 7443. Typical Pump Control Switch

PUMP CONTROL SWITCHES

The pump control switches are mounted at the valve spool end covers and are activated by movement of the valve spool.

SWITCH ADJUSTMENT

1. Loosen the two screws clamping switch to valve.

2. Position switch on spool end cover so that movable switch contacts are centered between stationary contacts. (Switch contacts are viewed thru clear plastic cover on switch.)

N O T E

ADJUSTMENT OF SWITCHES MUST BE MADE WITH VALVE SPOOL IN NEUTRAL POSITION.

3. After correct adjustment is obtained tighten switch clamping screws.

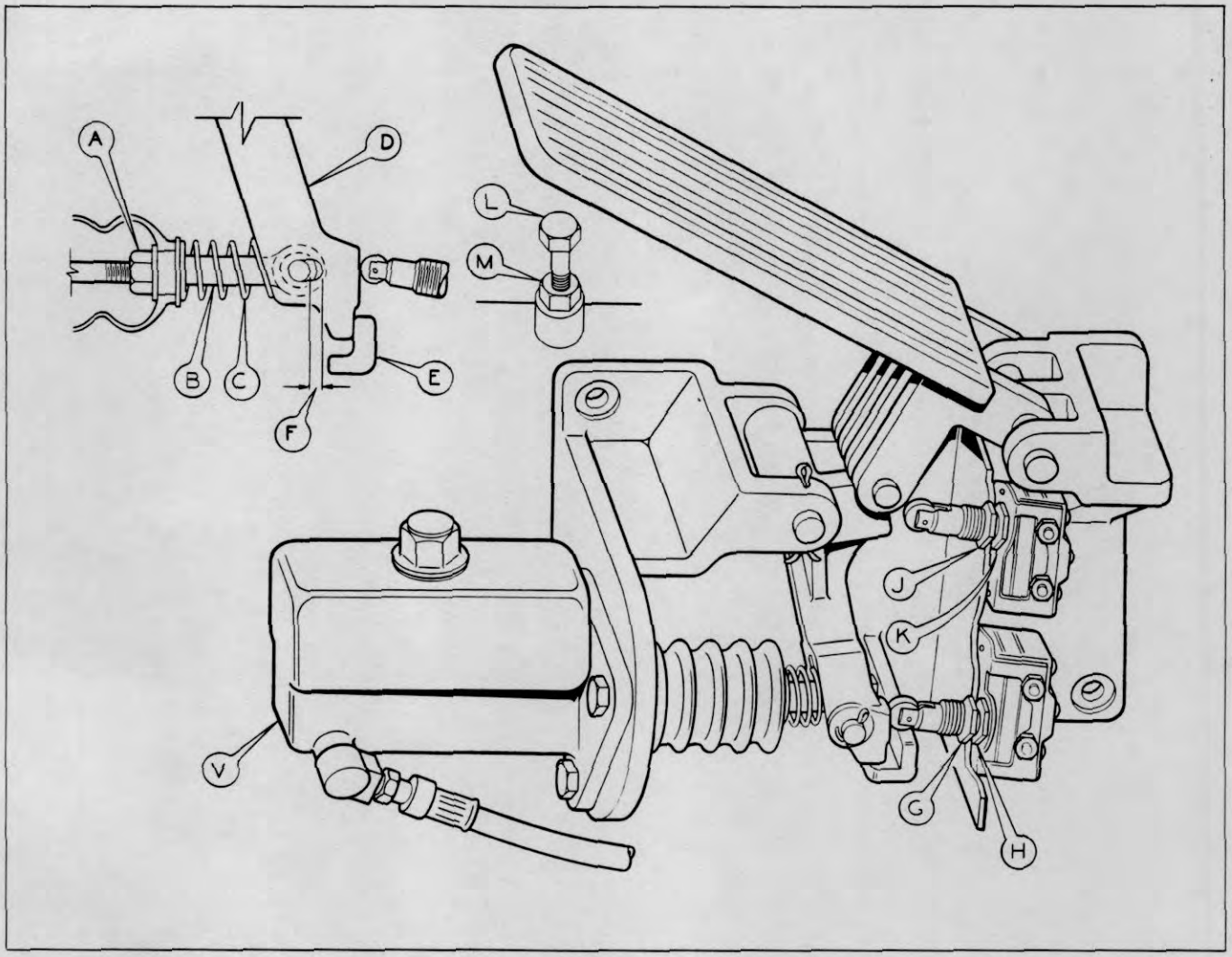

Plate 10138. Typical Accelerator Adjustment

MASTER CYLINDER PISTON ROD ADJUSTMENT

Loosen nut (Item A). Adjust piston rod, so that when it makes contact with the piston the rod end (Item B) by using the spring (Item C) pushes the lever (Item D) up to the stop (Item E) without decreasing the free play (Item F). Tighten nut (Item A).

FIRST POINT OF POWER SWITCH ADJUSTMENT

Loosen nuts (Item G & H). Move switch toward the lever (Item D) or away from the lever to adjust. Normally open switch contacts must open within free play (Item F). Tighten nuts (Item G & H).

2MS SWITCH ADJUSTMENT

Loosen nuts (Item J & K). Move switch in to or out of the bracket to adjust. Normally closed switch contacts must open when the toe of the accelerator pedal is 3/4 of a inch from the floorboard. Tighten nuts (Item J & K). Be sure switch does not bottom when accelerator pedal is fully depressed.

ACCELERATOR PEDAL ADJUSTMENT

Adjust stop screw (Item L) so that when the accelerator pedal is fully depressed the pedal will be parallel with the floorboard. Then tighten stop screw nut (Item M).

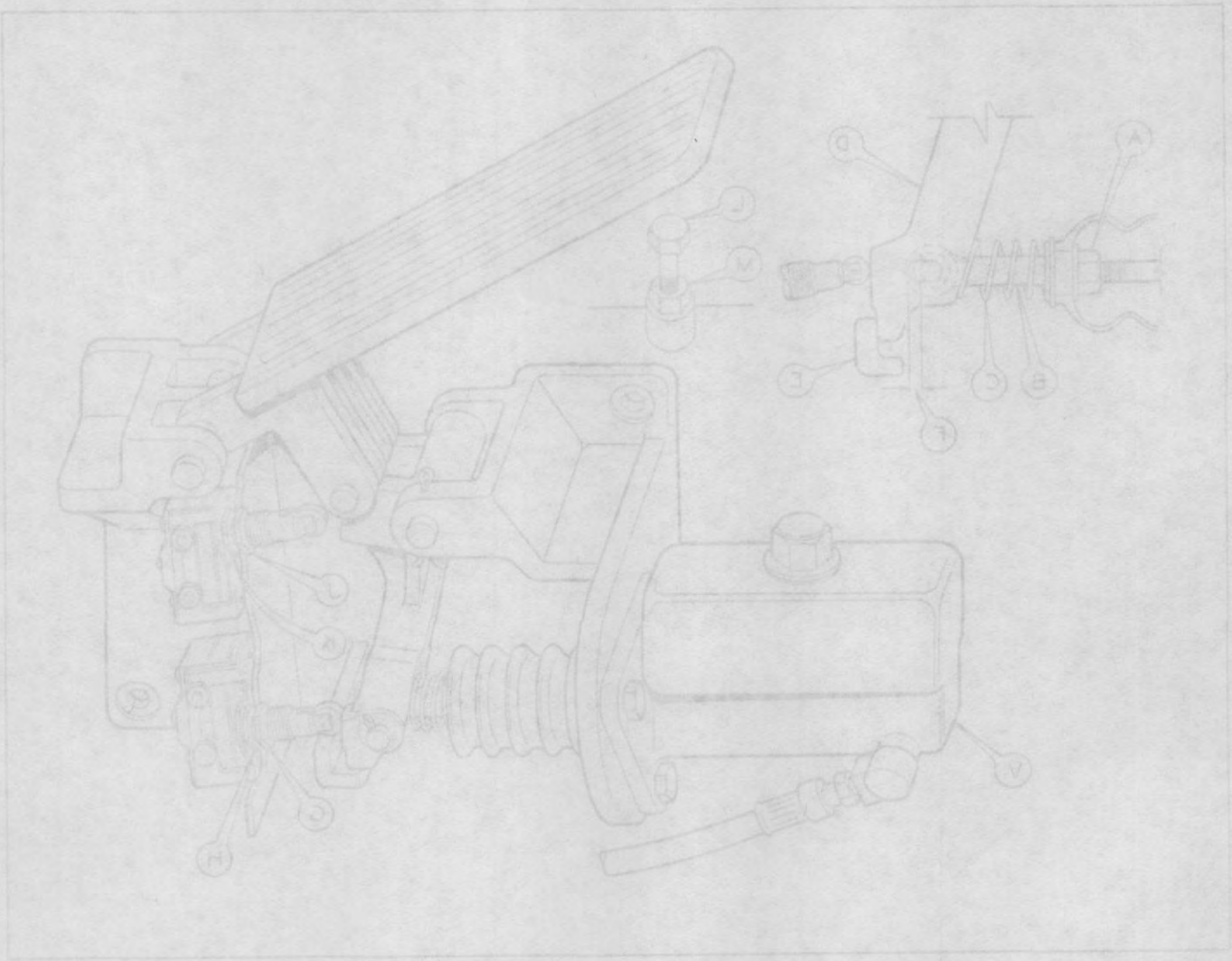

Plate 1013B. Typical Accelerator Adjustment

MASTER CYLINDER PISTON ROD ADJUSTMENT

Loosen nut (item A). Adjust piston rod, so that when it just contact with the piston the rod end (item B) by using the spring (item C) pushes the lever (item D) up to the stop (item E) without deadpedaling the free play (item F). Tighten nut (item A).

FIRST POINT OF POWER SWITCH ADJUSTMENT

Loosen nuts (item G & H). Move switch toward the lever (item D) or away from the lever to adjust. Normally open switch contacts must open within free play (item F). Tighten nuts (item G & H).

2ND SWITCH ADJUSTMENT

Loosen nuts (item J & K). Move switch in or out of the bracket to adjust. Normally closed switch contacts must open when the toe of the accelerator pedal is 3/4 of a inch from the floorboard. Tighten nuts (item J & K). Be sure switch does not bottom when accelerator pedal is fully depressed.

ACCELERATOR PEDAL ADJUSTMENT

Adjust stop screw (item L) so that when the accelerator pedal is fully depressed the pedal will be parallel with the floorboard. Then tighten stop screw nut (item M).

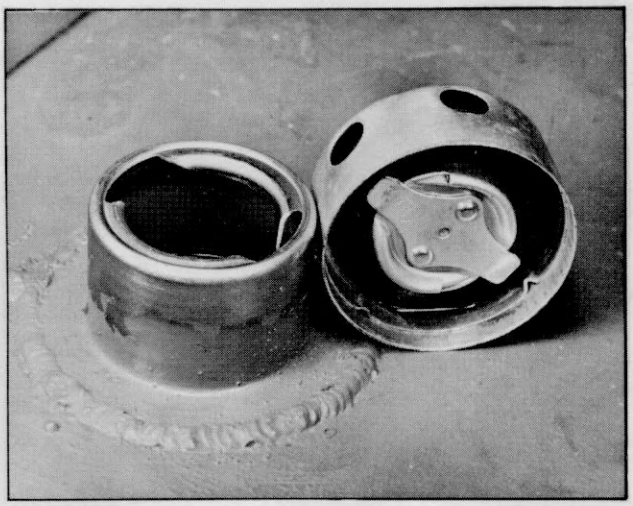

Plate 7046. Sump Tank and Breather

HYDRAULIC SUMP TANK BREATHER

Wash breather in a Stoddard type cleaning solvent until free of all foreign matter. Use compressed air to dry breather before replacing it on the machine.

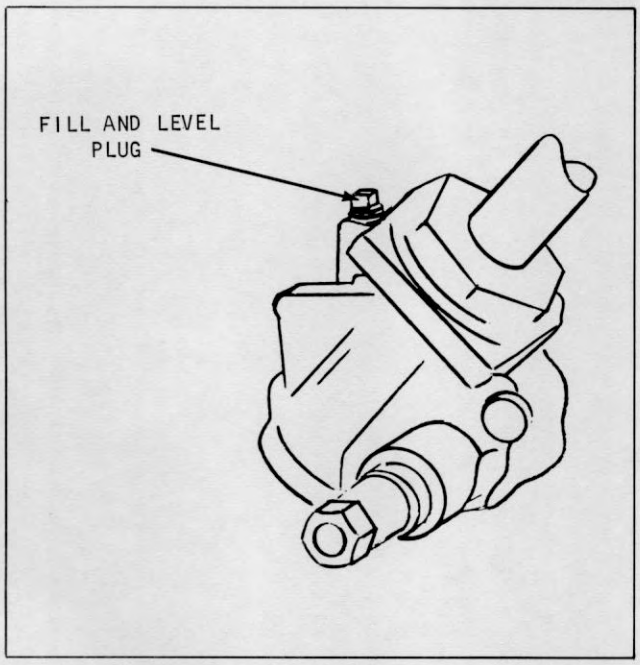

Plate 6429. Steering Gear

STEERING GEAR

The gear lubricant level should be checked every 100 operating hours and filled if necessary with NLGI #1 (Amolith grease EP #1 or its equivalent). Fill to level of filler plug opening only. Replace plug after filling.

N O T E

Before removing fill/level plug, be sure to wipe all dirt from around the plug and opening.

CONTACTOR PANEL ADJUSTMENTS

Tools Required

Before going into the adjustment procedures, you should have with you (or available at the job-site) all of the tools and gages we illustrate and list.

Tools 0-1 and 0-3 are ones you can make and will save you considerable time in making these special adjustments. Seeing they cannot be purchased, they call for more discussion.

Tool # 0-1 make from 3/8" diameter drill rod and form to shape shown. Slot with a hacksaw with two blades inserted if necessary to obtain in one cut a proper width slot to dimensions shown....Plate 9731.

Tool # 0-3 pusher rod. Make from 3/32" welding rod and remove flux. Point end as shown for best results. Form an S shape on opposite end as shown....Plate 9678.

Before starting adjustments you should be prepared and have a full set of normally open moveable and normally open stationary arms and replaceable tips with you for each machine to be serviced or checked.

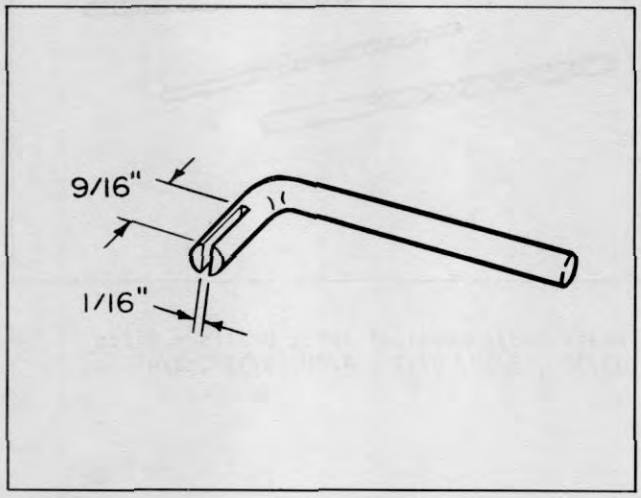

Plate 9731. Typical Tool # 0-1

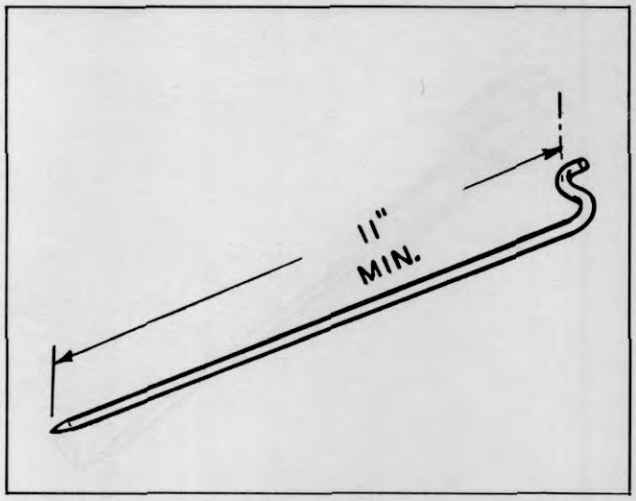

Plate 678. Typical Pusher Rod - Tool # 0-3 (Used only in connection with type "T" Chatillon Spring Tension Gage).

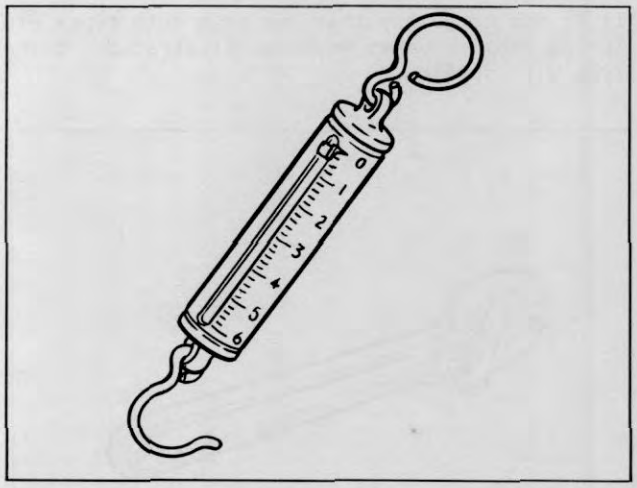

Plate 9679. Typical Instrument Type "T" - Chatillon Spring Tension Gage, Mfg. by Chatillon Inst. Co., New York, N.Y.

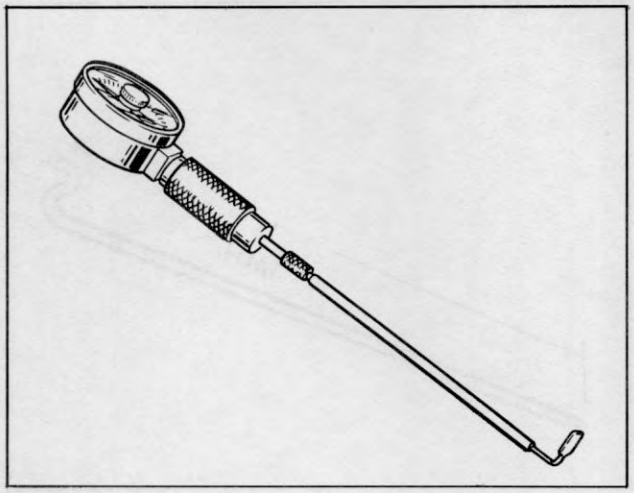

Plate 9680. Typical Spring Tension Gage..... Clark Part # 886717.

N O T E

It is not necessary that you have both types of Spring Tension Gages we have illustrated. Either type will suffice.

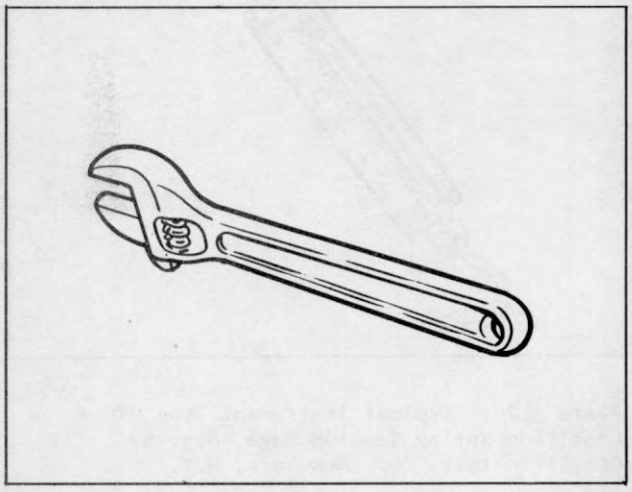

Plate 9681. Typical 8" Crescent Wrench.

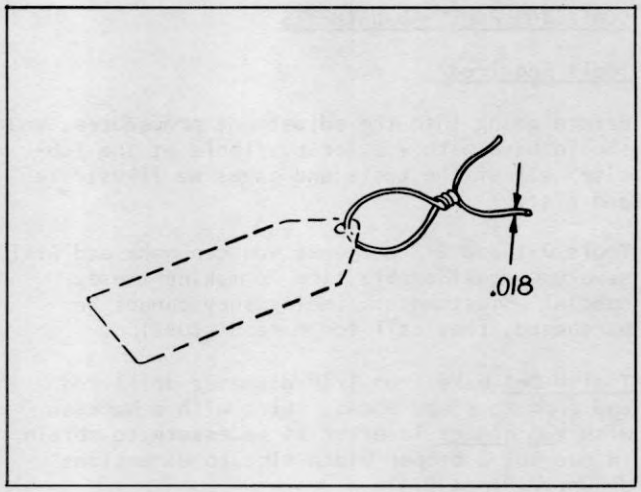

Plate 9682. Typical Tag Wire .018 Diameter Maximum.

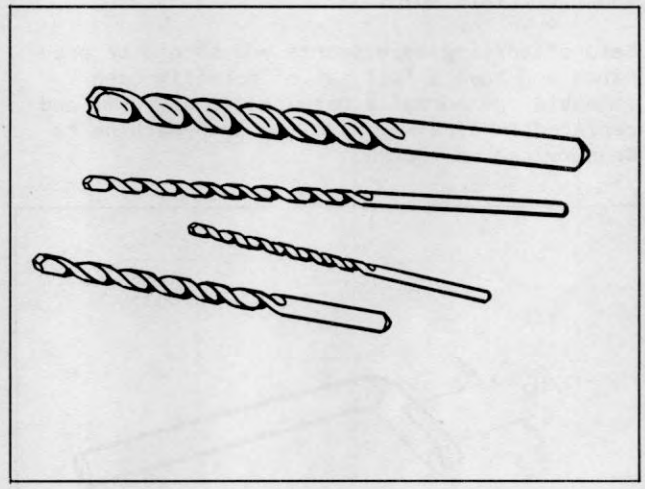

Plate 9683. Typical Twist Drills - Sizes 13/32", 3/8", 5/32", 1/8", 3/32", 1/4".

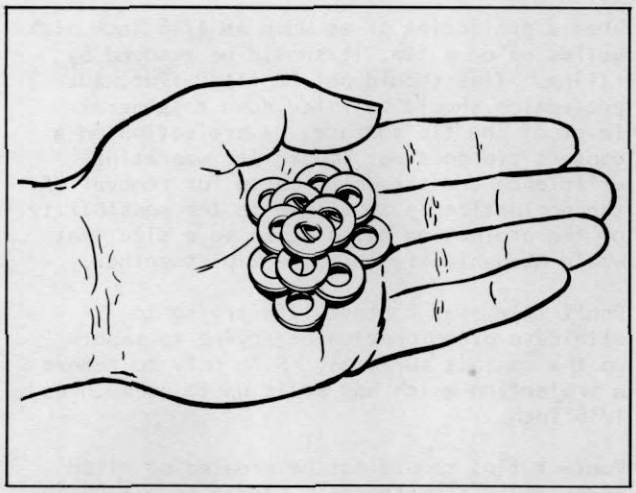

Plate 9684. Typical Handful of 1/4" Flat Washers.

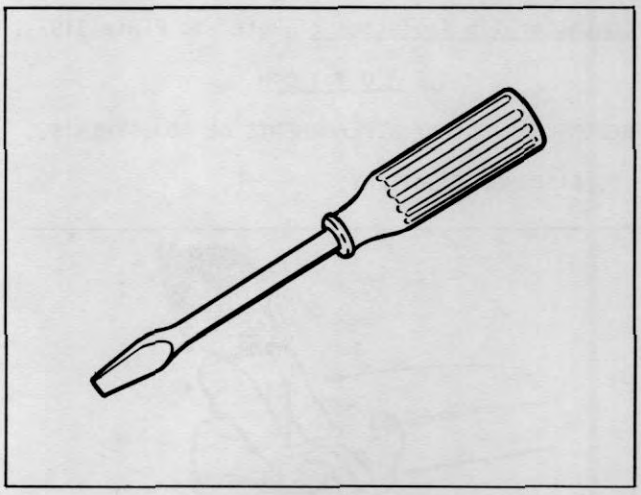

Plate 9686. Typical Screwdriver approximately 8" length.

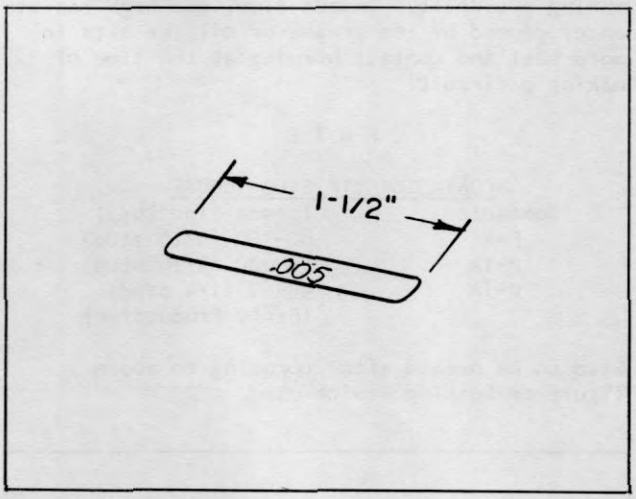

Plate 9685. Typical Brass or Steel Shim Stock .005" Thick.

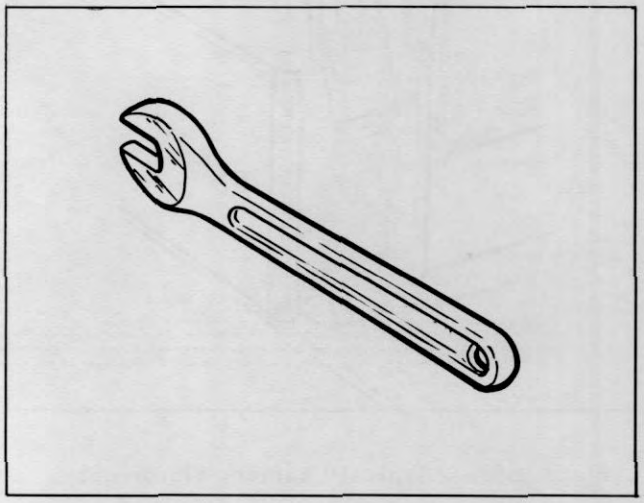

Plate 9687. Typical Open End Wrenche size - 7/16".

Contactor Tip Replacement (Refer to Plate 3197).

CAUTION

BEFORE MAKING ANY REPLACEMENTS OR ADJUSTMENTS..

....DISCONNECT BATTERY.

Plate 9688. "Typical" Battery Disconnect

Actual replacement of contacts should only be made after 90% of the tip material has been burned away.

The following figures show six contacts in various stages of wear. These are reference numbered from 1 through 6. Of these six illustrated, only the contact numbered 1 is worn or burned badly enough that it should be replaced. All of the other contacts shown have a great deal of life left in them, although the contact surfaces are burned to a dark color and they show pitting.

Refer to contact number 6. This is the worst of the five contacts that are still serviceable. The pits in this contact are 1/16 inch deep, yet despite the appearance, 80% of the contact tip material is still present, hence 70% of the original life expectancy could be obtained by continued use of this contact.

When a projection of as much as 1/16 inch high builds up on a tip, it should be removed by filing. Tips should not be filed flat, but projection should be filed down to general level of the tip surface. A projection on a contact tip does not impair its operating efficiency and the only reason for removal of the projection is to eliminate the possibility of the projection building up to a size that would mechanically lock the tips together.

Don't file away contact life trying to eliminate discoloration or trying to smooth up the contact surfaces. File only to remove a projection which has built up to as much as 1/16 inch.

Contact tips should not be greased or oiled under any circumstances. Grease or oil on the contact surfaces increases the surface resistance and may be the cause of collecting sufficient dirt to prevent contacts closing and making a circuit. In addition, the high resistance, caused by the grease or oil, results in more heat and contact burning at the time of making a circuit.

NOTE

CONTACTOR TIP STUD TORQUE

Contactor	Torque (in. lbs.)
F-R	80-100 (5/16 stud)
P-1A	80-100 (5/16 stud)
P-1A	45-60 (1/4 stud) (Early Production)

Stud to be peened after torquing to above figure or locking device used.

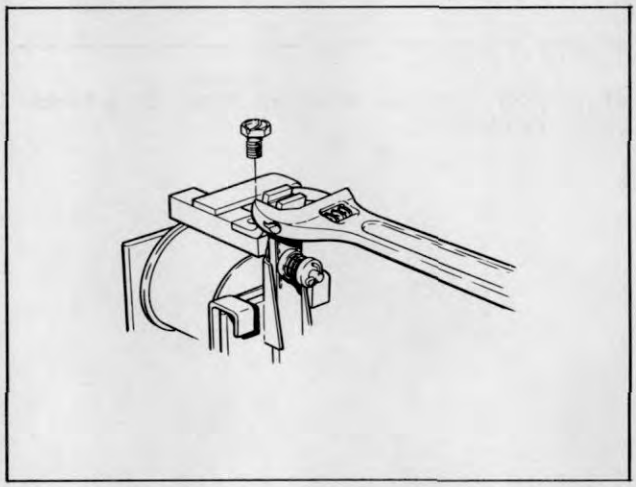

Plate 9690. Typical Contactor Arm Alignment

Use Plate 9690 for an easy approach to aligning normally open stationary and moveable tips.

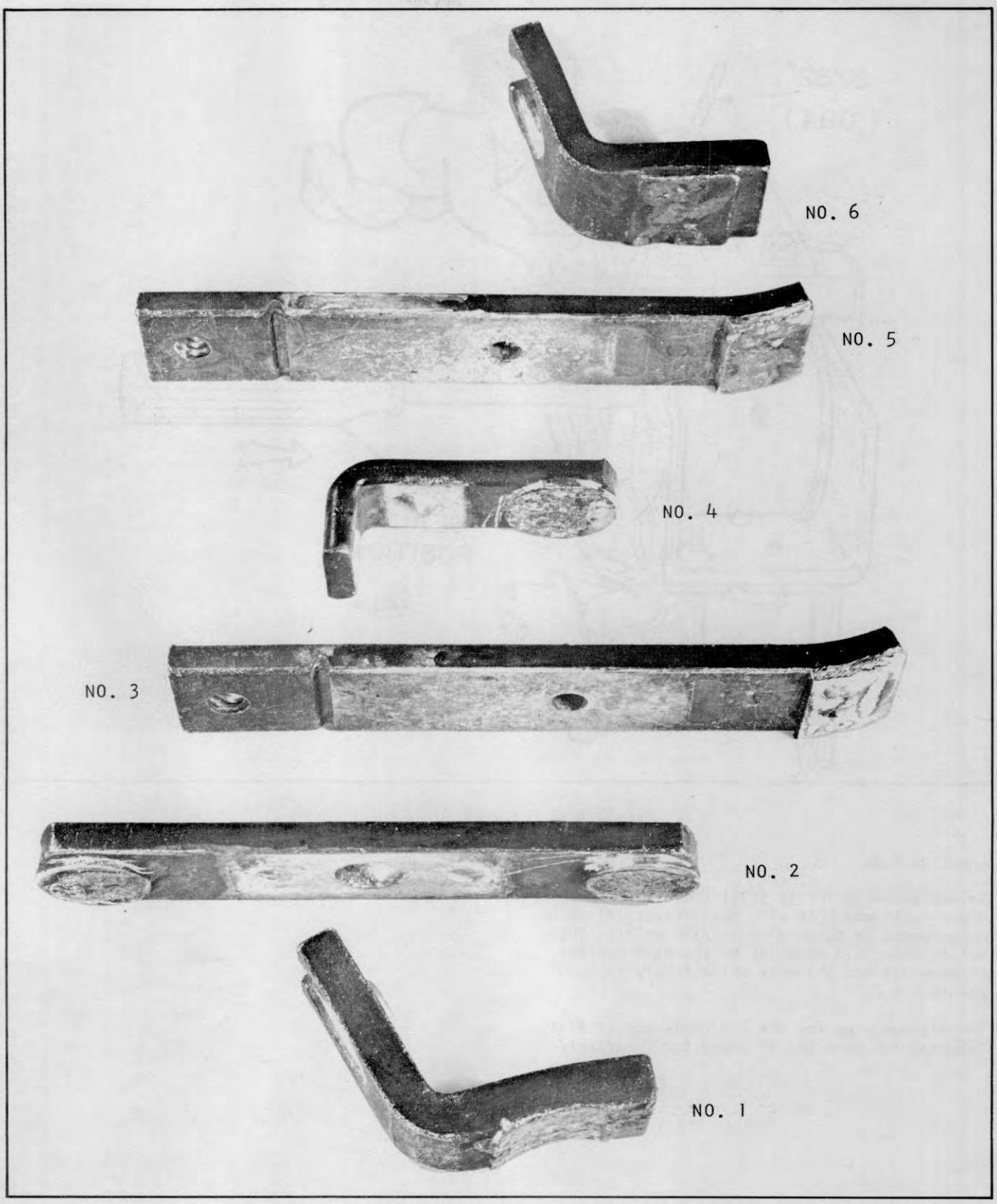

Plate 3197. Typical Contactor Tips

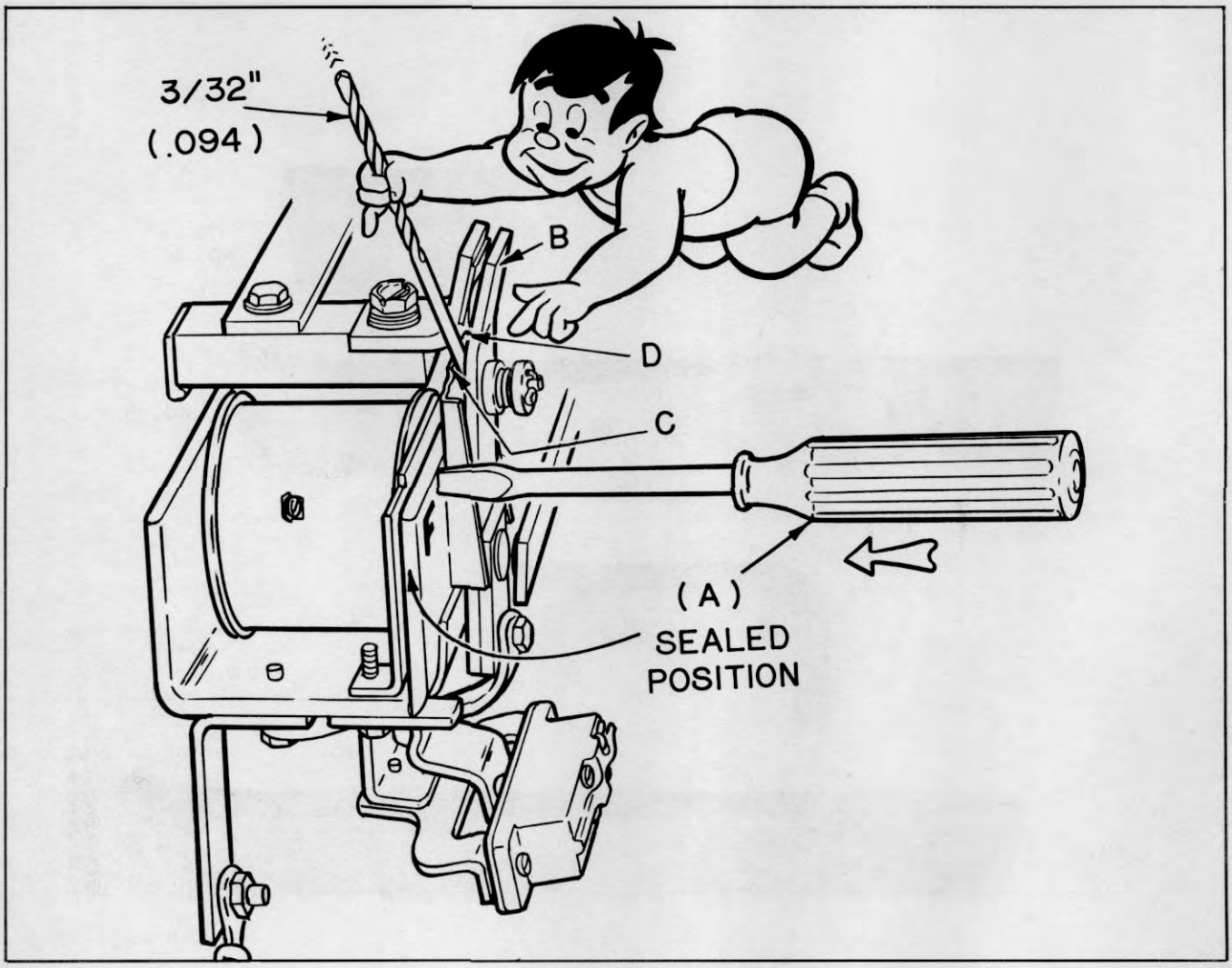

Plate 9691. Typical Wipe Check

Checking Wipe

To measure wipe (Plate 9691) seal the armature plate fully and hold with screwdriver (A) while measurement is taken with a 3/32" drill. This drill, when held parallel to the back surface of moveable arm (B) must slide freely between points C & D.

The minimum wipe for the F-R contactor is 3/32". The wipe for pump and 1A contactor is 3/32-1/8".

Adjusting Wipe

Wipe is controlled by three conditions:

(1) Stationary normally open tip, (new or worn).

(2) Improper (off brand) tips or tip kits supplied by anyone but Clark which could have wrong angle bends in the moveable or stationary arms.

(3) Angle at end (A) Plate 9692 of moveable contact arm support stop. Correct wipe can be obtained by the bending of (A) which will either increase or decrease wipe. When bending must be done to get proper wipe, then a special tool (C) # 0-1 is recommended. This tool, if used carefully, will guarantee the whole surface of the stop will be bent evenly and kept parallel to the back surface of the moveable tip (D). To increase wipe bend up (E). To decrease wipe bend down (F).

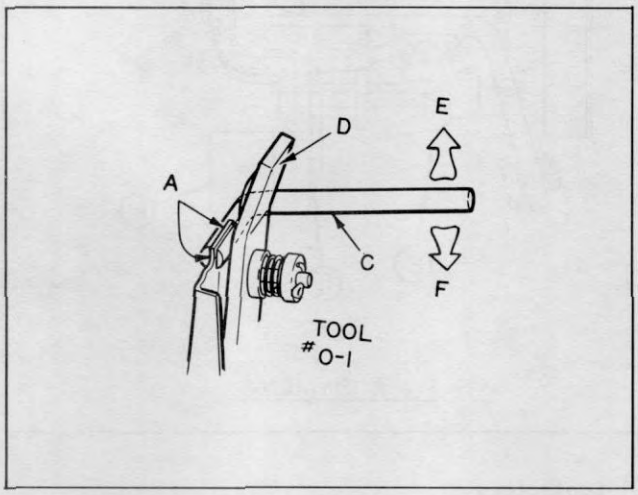

Plate 9692. Typical Wipe Adjustment

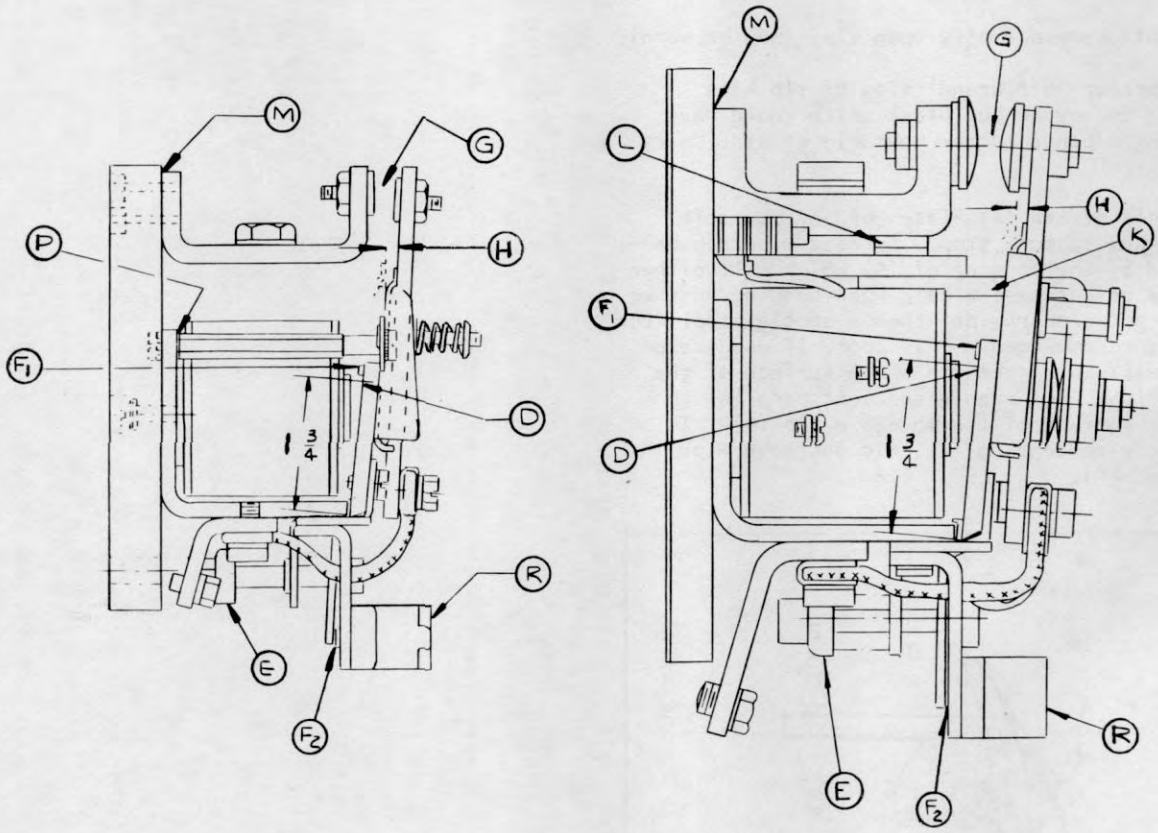

P & 1A CONTACTOR

F & R CONTACTOR

Plate 9703. Typical Contactors

Adjustment of Interlock (R)

The electrical interlock must operate with a (0.015 in. P and 1A or 0.035 in. F and R) thick shim (F1) between armature and core. Snapping noise indicates interlock (R) has operated. Also, with a 0.015 in. thick shim (F2 - all contactors) between interlock operator and plunger. Plunger must not bottom with armature seated against core.

Contactor Tip Gap Check

Check all air gaps for the following dimensions:

Forward & Reverse:
- Normally open 3/8" - 13/32"
- Normally closed 3/32" - 1/8"

Pump & 1A:
- Normally open 3/16" - 7/32"

Proper settings can best be measured by using new twist drills of proper sizes. See Plate 9693.

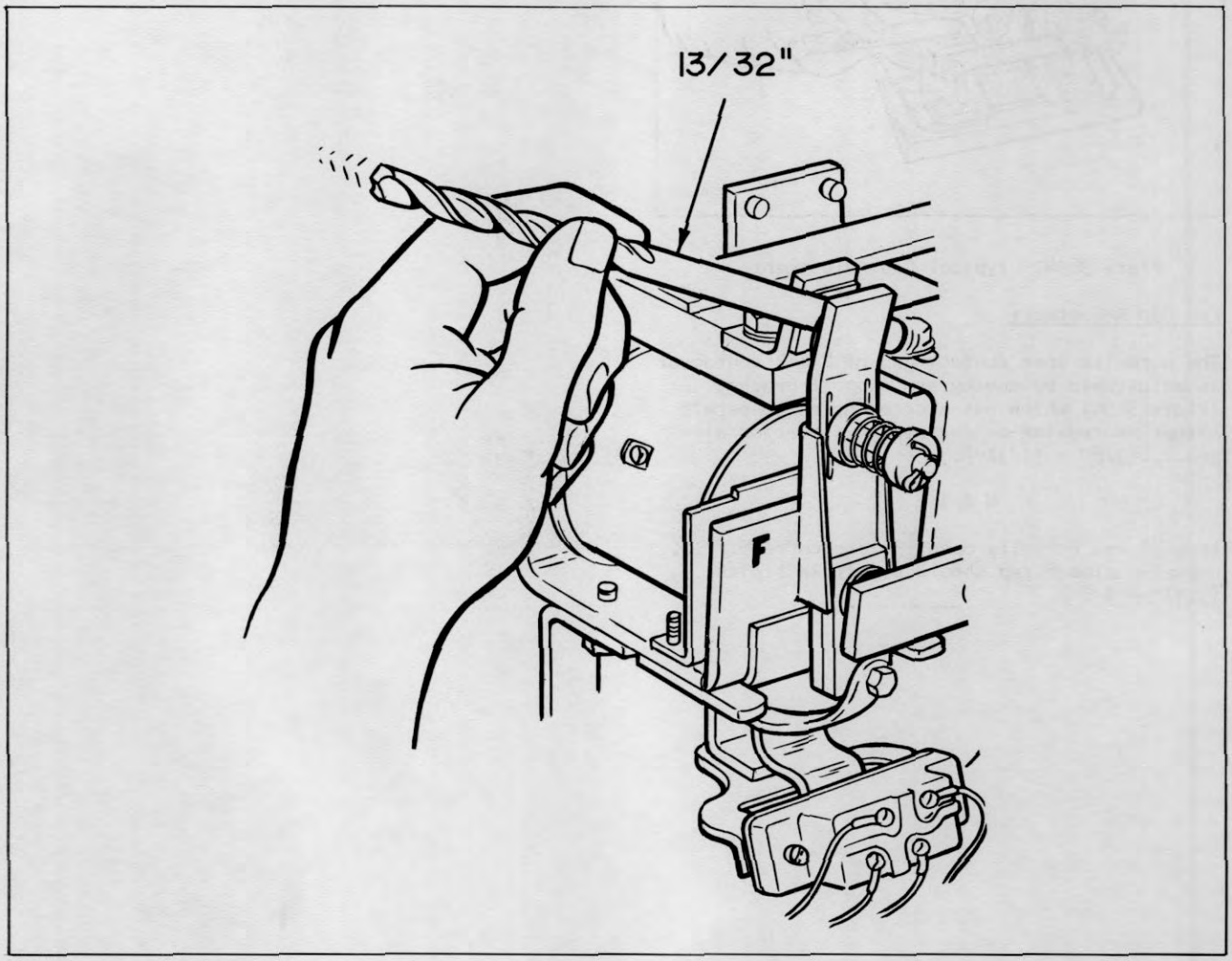

Plate 9693. Typical Gap Check

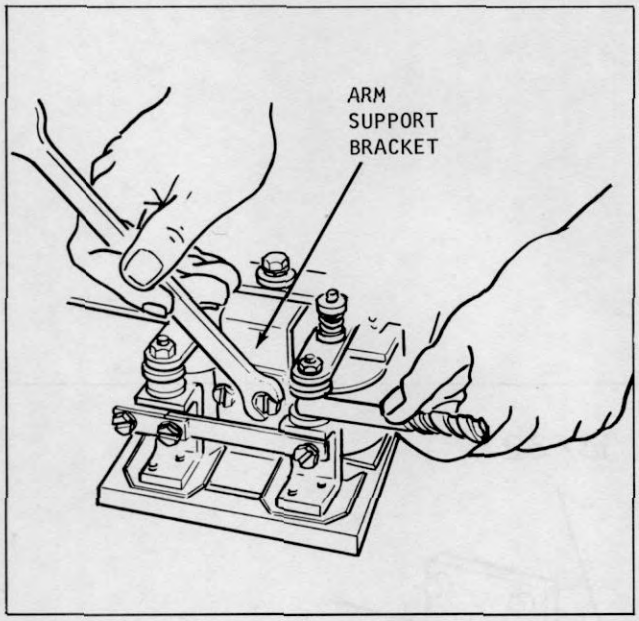

Plate 9694. Typical Gap Adjustment

F-R Gap Adjustment

The normally open contact gap of F & R contactor is adjustable by moving arm support bracket (Plate 9694) which has slotted holes to permit either increasing or decreasing contactor air gap....(3/8" - 13/32").

N O T E

If wipe and normally open gap are correct..... normally closed gap should be within limits.... (3/32" - 1/8").

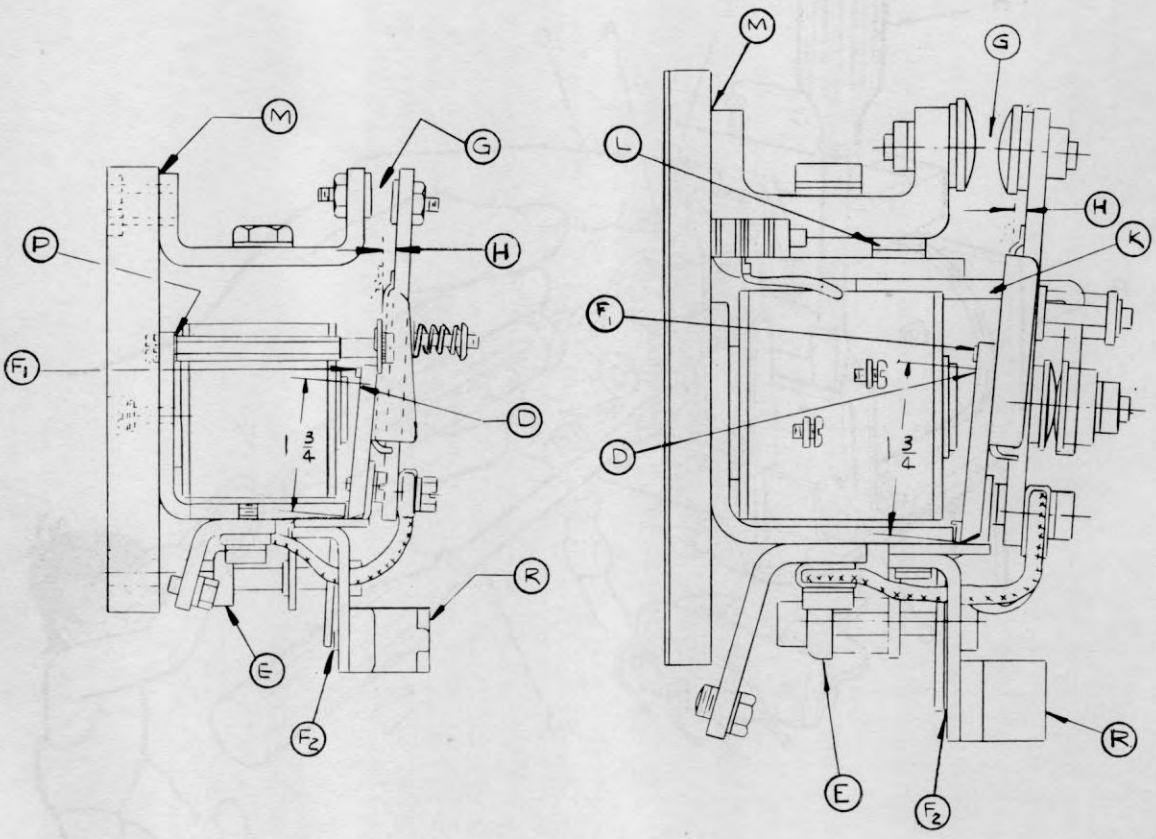

P & 1A CONTACTOR

F & R CONTACTOR

Plate 9703. Typical Contactors

P-1A Gap Adjustment

To obtain proper gaps on 1A and pump tips, adjust by adding or removing equal number of washers under armature stop posts (P).

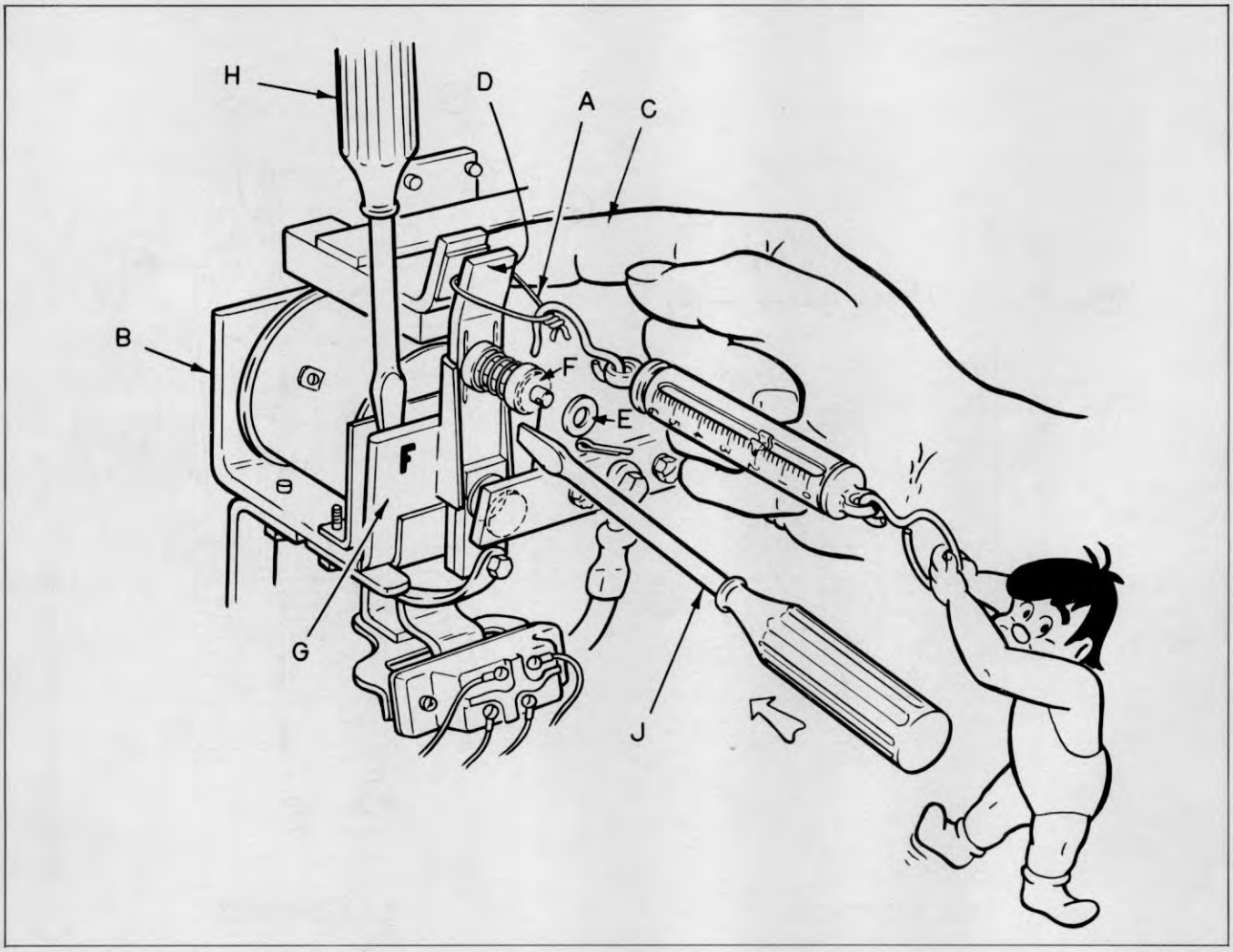

Plate 9696. Typical Spring Adjustment

Spring Tension Adjustments

Spring tensions consists of three to each contactor (1A-P-F & R). All three are explained and illustrated in detail. The three spring tensions can be identified as follows:

1. Initial
2. Armature Opening Force
3. Final

Starting with Initial , known as Initial, Normally Open Tip Pressure refer to Plate 9696 for P & 1A and Plate 9697 for F & R.

Pump and 1A Adjustments

To avoid confusion let's take them separately, starting with 1A and P.

With contactor in its normal open position, insert tag wire (A) at a vertical mid point on the tip surface and attach spring tension gage of either type, being sure it is held at a right angle to surface (B). Using index finger placed lightly in position (C) to detect slightest movement of normally open tip (D) read scale when tip first begins to re-seat on its stop after being slightly moved away from stop. Proper spring tension is 56 - 64 oz.

If pressure is less than minimum, add a plain 1/4" flat washer (E) as shown in its proper position just under cotter key or "E" ring (indicated by dotted lines) (F) and reassemble. Repeat procedure of reading pressure and add additional washer if necessary.

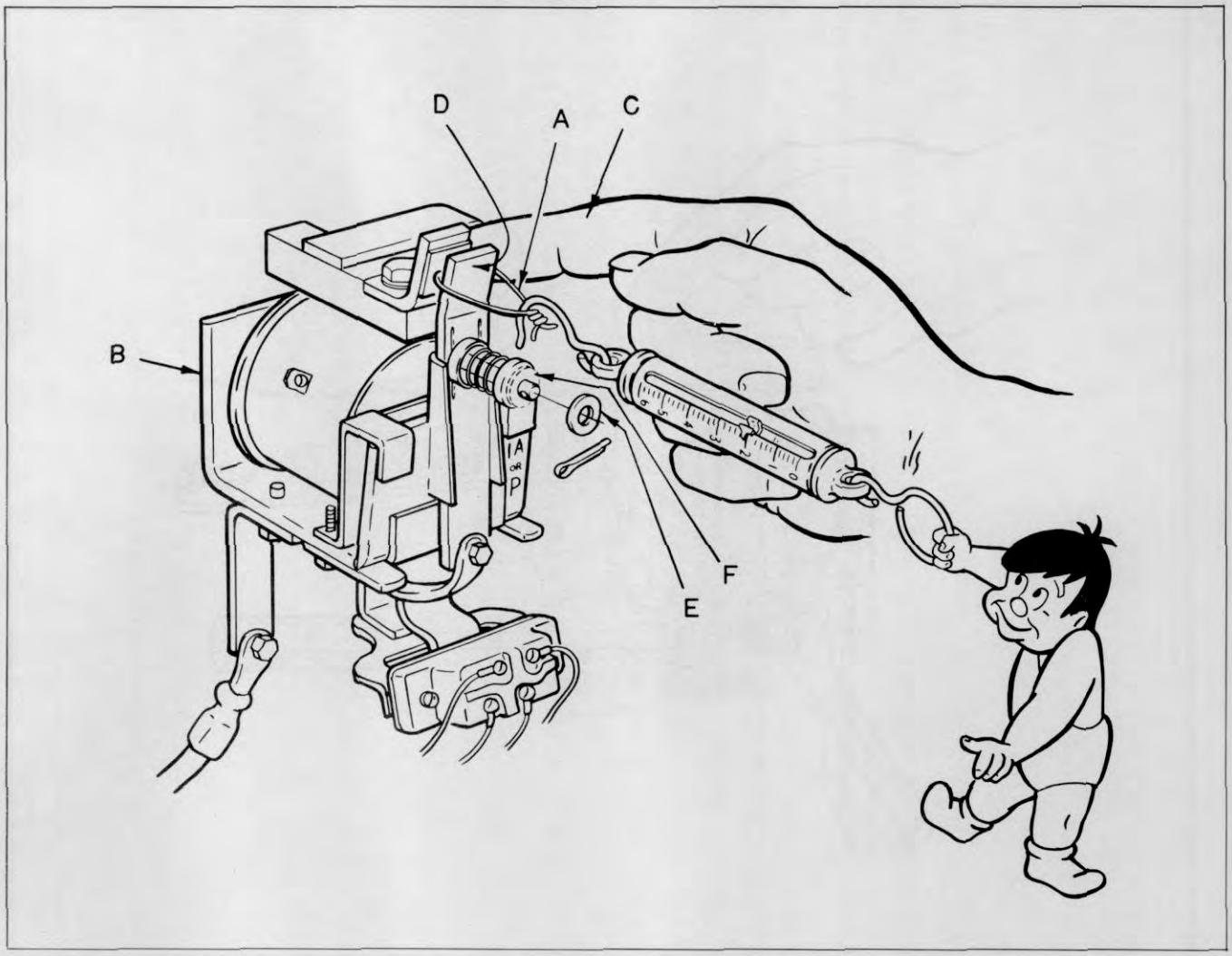

Plate 9697. Typical Spring Adjustments

F-R Spring Tension Adjustments

The adjustment of F & R (Plate 9697) has a slightly different approach and set-up.

The change in set-up is due to the F & R contactors having both normally open and normally closed tips. We must then block the armature plate (G) at a mid point to be sure both sets of tips (normally open and normally closed) are in an open position so the initial contact tip pressure can be read correctly. To accomplish this we utilize two screwdrivers (H & J). Screwdriver H to limit action of armature plate (G) at a mid point and screwdriver (J) to hold armature in mid position. Insert tag wire (A) at a vertical mid point on the tip surface and attach spring tension gage of either type being sure it is held at a right angle to surface (B).

Using index finger placed lightly in position (C) to detect slightest movement of normally open tip (D) read scale when tip first begins to re-seat on its stop after being slightly moved away from stop. Proper spring tension is 40 - 48 oz.

If pressure is less than minimum, add a plain 1/4" flat washer (E) as shown in its proper position just under cotter key (indicated by dotted lines) (F), and reassemble. Repeat procedure of reading pressure and add additional washers if necessary.

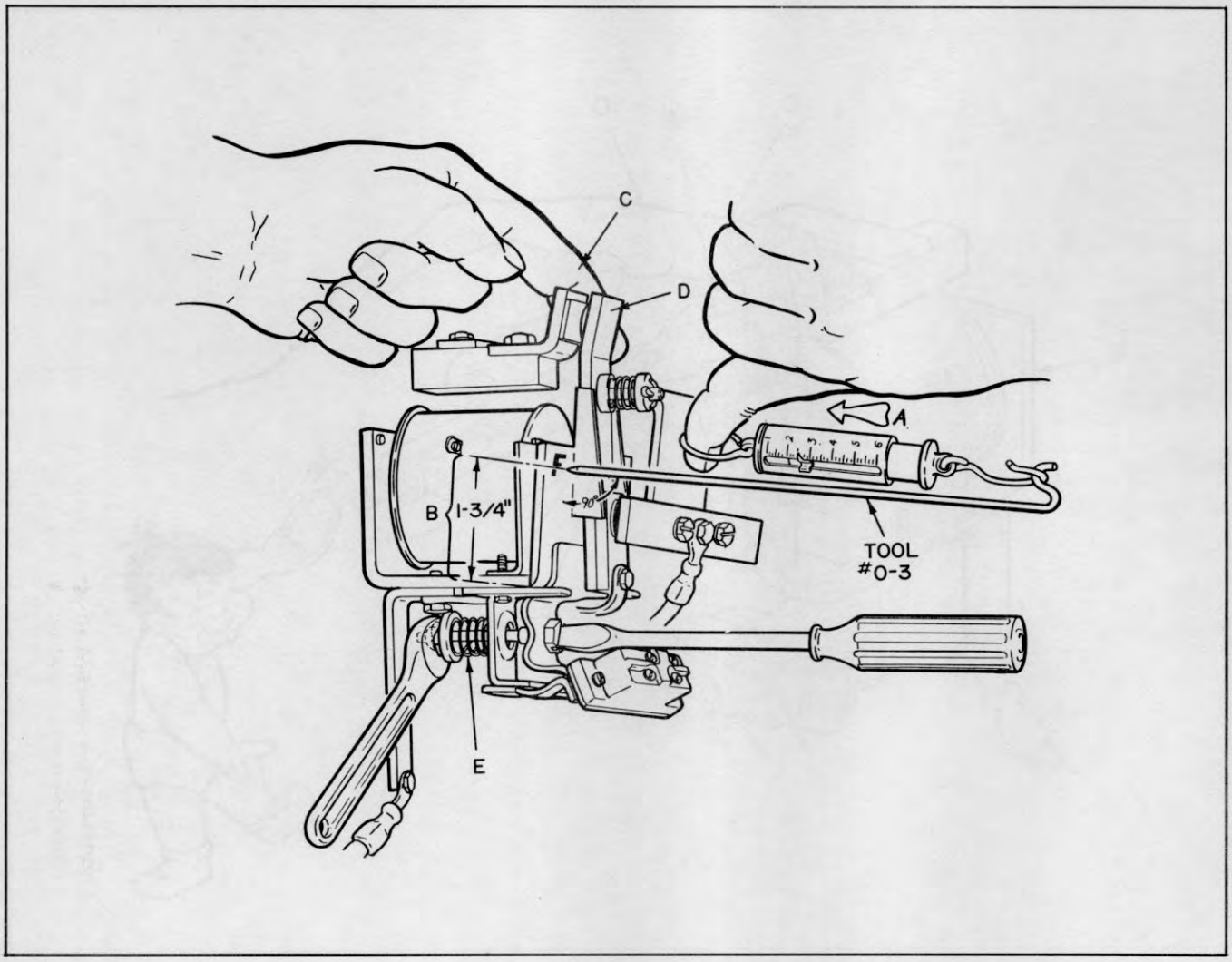

Plate 9698. Typical Armature Adjustment

Armature Spring Pressure Adjustment

Depending upon type of spring tension gage used, follow either Plate 9698 or 9699. Proper spring tension is 32 - 38 oz. on all contactors.

A push action (A) (Plate 9698) from the spring tension gage is utilized here to check pressure.

With the contactor in its normal open position, place spring tension gage and tool # 0-3, Plate 9698 at a point 1 3/4" up from pivot point (B). Use index finger (C) to again detect slightest movement of normally open tip (D). Read scale when armature first begins to contact stop after being moved away slightly. If high or low, adjustmnet can be made through varying tension of spring (E) to bring to proper setting.

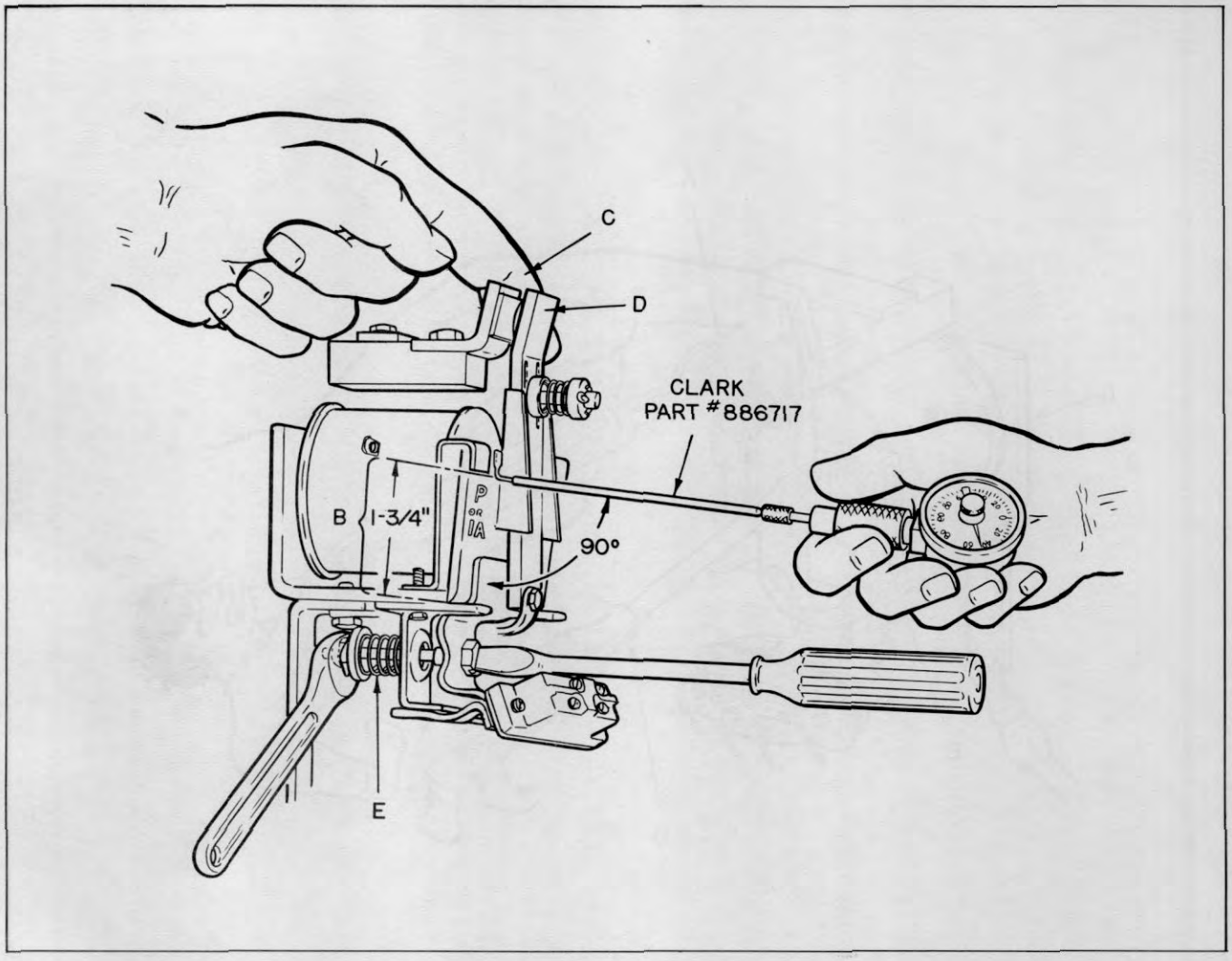

Plate 9699. Typical Armature Adjustment

Armature Spring Pressure Adjustment (Cont.)

Plate 9699 merely shows use of a different type of spring tension gage. Your procedure, however, is the same. But for your convenience we will repeat this procedure.

Proper spring tension is 32 - 38 oz. for all contactors.

A push action (Plate 9699) from the spring tension gage is utilized here to check pressure.

With the contactor in its normal open position, place spring tension gage at a point 1 3/4" up from pivot point (B). Use index finger (C) to again detect slightest movement of normally open tip (D). Read scale when armature first begins to contact stop after being moved away slightly. If high or low, adjustment can be made through varying tension of spring (E) to bring to proper setting.

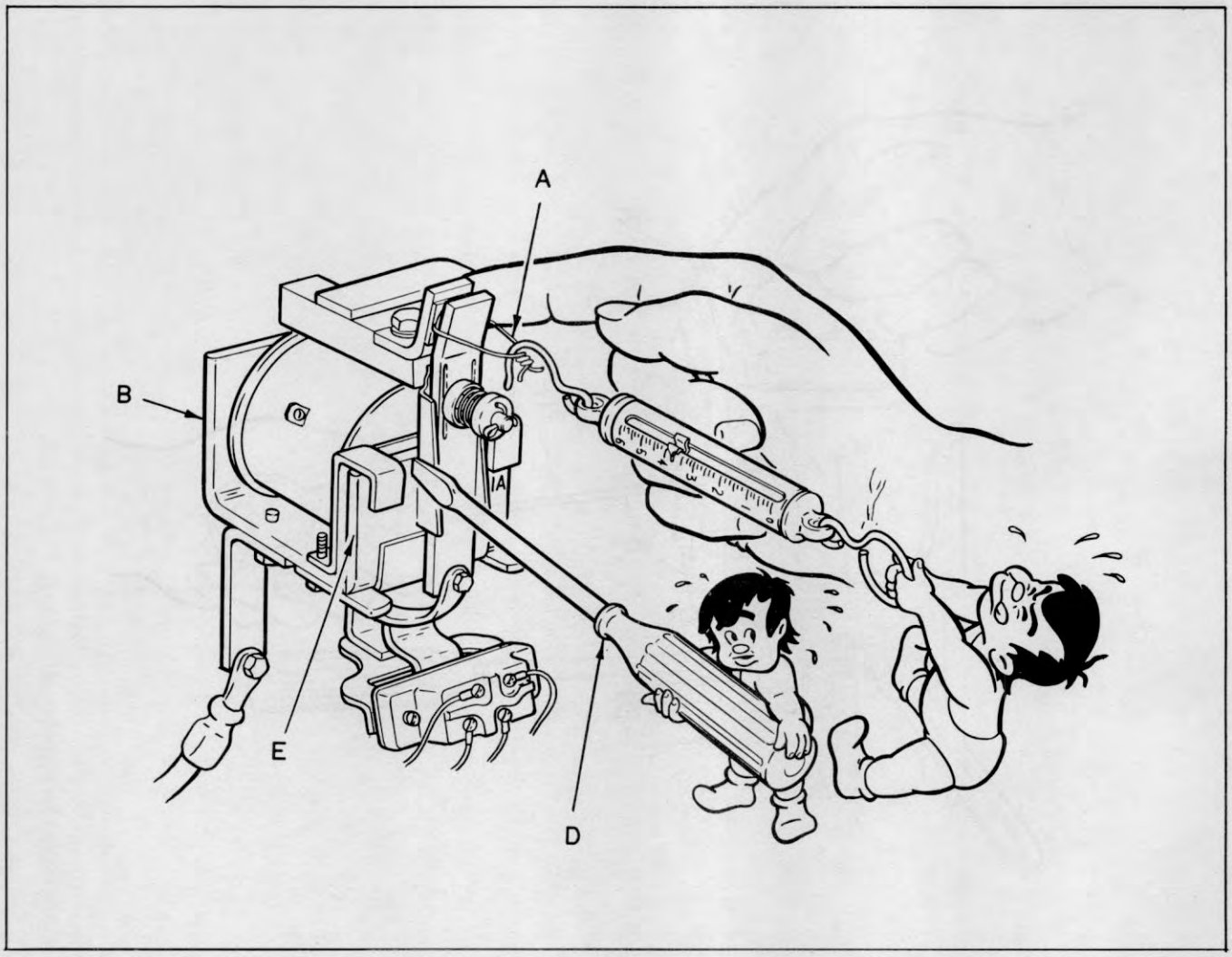

Plate 9700. Typical Spring Check

Final Normally Open Contact Tip Pressure .

Follow the one procedure explained and illustrated above for all contactors (1A-P-F & R). See Plate 9700.

With tag wire (A) positioned at a mid point vertically on the tip itself and spring tension gauge held at a right angle to surface (B), seal the armature plate (E)....and while keeping sealed with a screwdriver (D)....read spring tension gauge when tips first begin to re-seat after being slightly separated. Proper spring tension is 46 - 56 oz. for F-R....and 60 - 68 oz. for P-1A.

NOTE: WIPE ALL DIRT FROM FITTINGS BEFORE APPLYING A GREASE GUN.

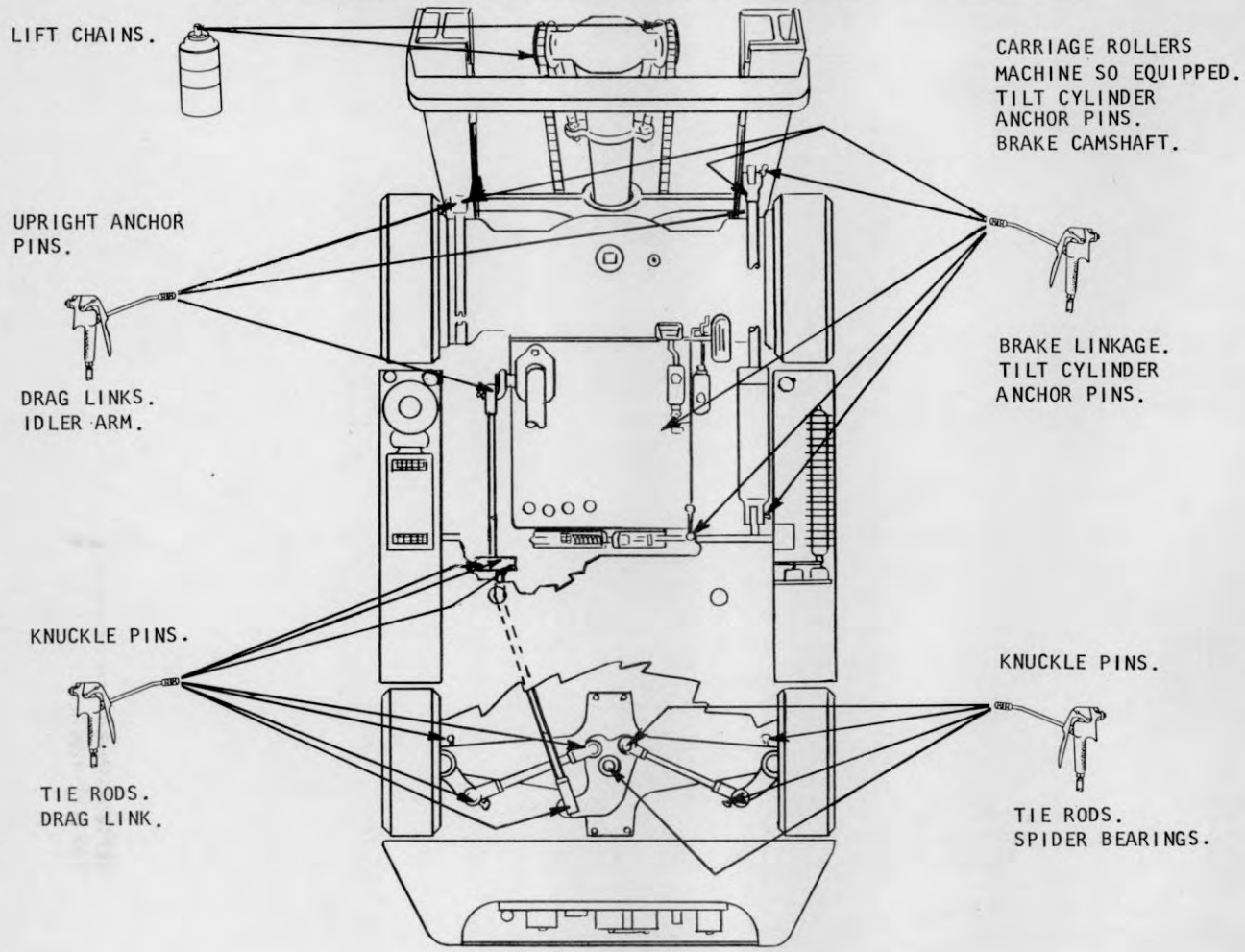

Lubrication Chart Key

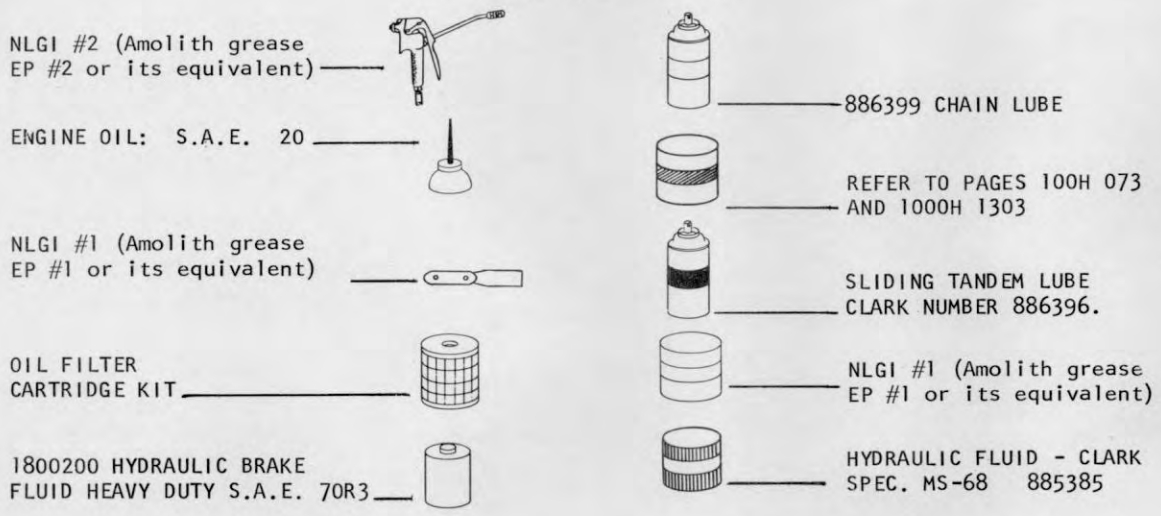

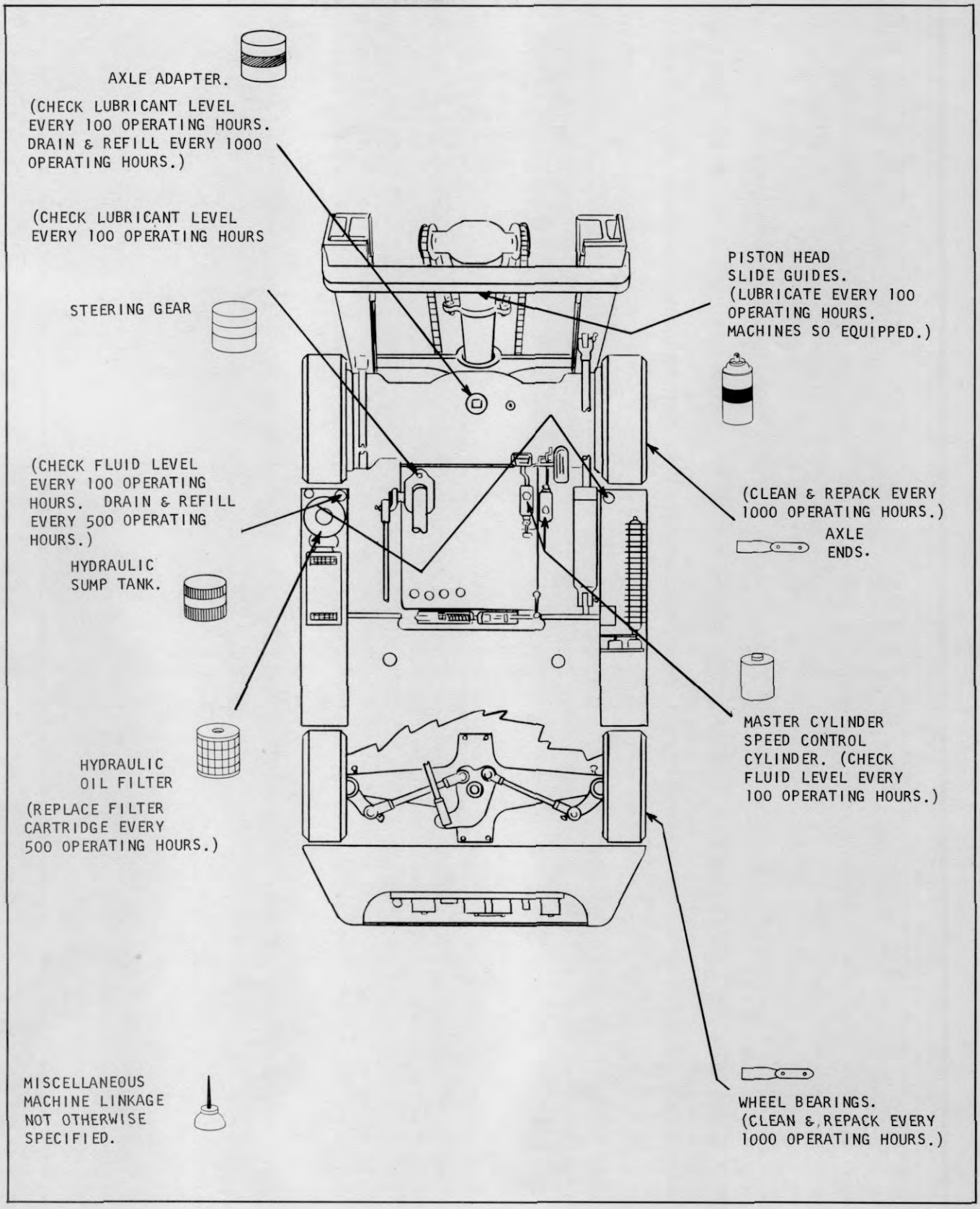
AXLE ADAPTER.
(CHECK LUBRICANT LEVEL EVERY 100 OPERATING HOURS. DRAIN & REFILL EVERY 1000 OPERATING HOURS.)
(CHECK LUBRICANT LEVEL EVERY 100 OPERATING HOURS
STEERING GEAR
PISTON HEAD SLIDE GUIDES. (LUBRICATE EVERY 100 OPERATING HOURS. MACHINES SO EQUIPPED.)
(CHECK FLUID LEVEL EVERY 100 OPERATING HOURS. DRAIN & REFILL EVERY 500 OPERATING HOURS.)
HYDRAULIC SUMP TANK.
(CLEAN & REPACK EVERY 1000 OPERATING HOURS.)
AXLE ENDS.
MASTER CYLINDER SPEED CONTROL CYLINDER. (CHECK FLUID LEVEL EVERY 100 OPERATING HOURS.)
HYDRAULIC OIL FILTER
(REPLACE FILTER CARTRIDGE EVERY 500 OPERATING HOURS.)
MISCELLANEOUS MACHINE LINKAGE NOT OTHERWISE SPECIFIED.
WHEEL BEARINGS. (CLEAN & REPACK EVERY 1000 OPERATING HOURS.)

500 HOURS

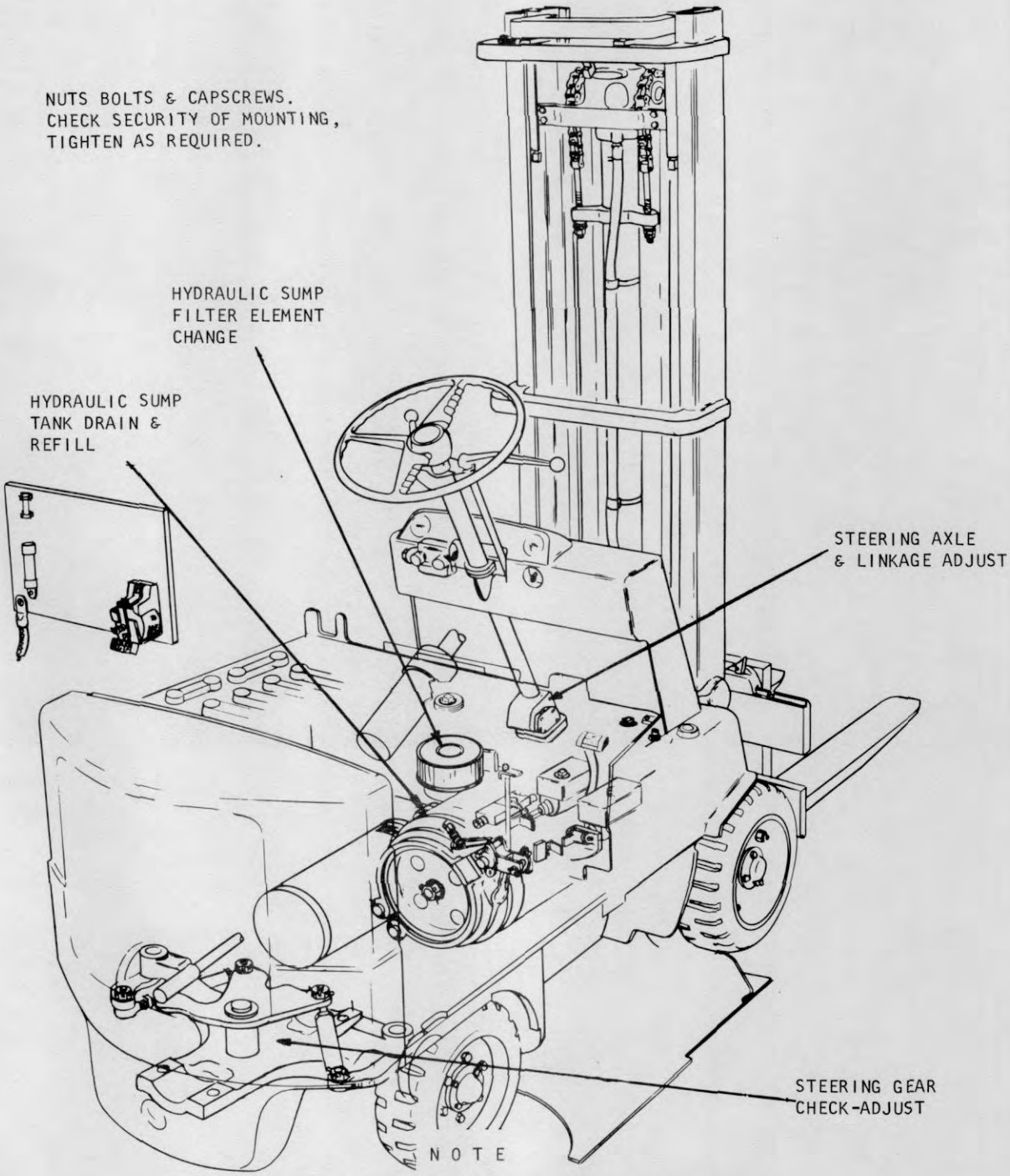

NOTE

AFTER EACH 500 HOURS OF OPERATION, PERFORM THE ABOVE SERVICES IN ADDITION TO THE ONES LISTED ON THE 8 HOUR AND 100 HOUR LUBRICATION AND PREVENTIVE MAINTENANCE ILLUSTRATIONS.

Plate _____ Lubrication and Preventive Maintenance Illustration

DRAIN SUMP TANK AND CHANGE HYDRAULIC FILTER ELEMENT ---- USED WITH SOLID STATE CONTROL EQUIPPED UNITS.

N O T E

If desired, the hydraulic pump and motor assembly may be swung outward by removing retainer (A).

1. Lower upright, turn power switch to the off position and open both L.H. and R.H. frame doors to allow access to the sump tank drain plugs and hydraulic filter.

2. Remove sump fill plug from L.H. tank and sump breather from R.H. tank. Using a hose attached to a funnel, place unattached end of hose in a large container and remove drain plugs.

3. Allow tanks to thoroughly drain and then flush each tank with at least two quarts of clean hydraulic fluid.

C A U T I O N

DO NOT OPERATE THE HYDRAULIC PUMP WHILE THE SUMP TANK IS EMPTY AS DAMAGE TO THE HYDRAULIC PUMP WILL RESULT.

4. Disconnect hose and remove hydraulic filter retaining bolts and pull filter assembly out of the sump tank. REMOVE ANY REMAINING GASKET MATERIAL FROM MOUNTING FLANGES.

5. Clean out any residue left in the sump cavity. *see below

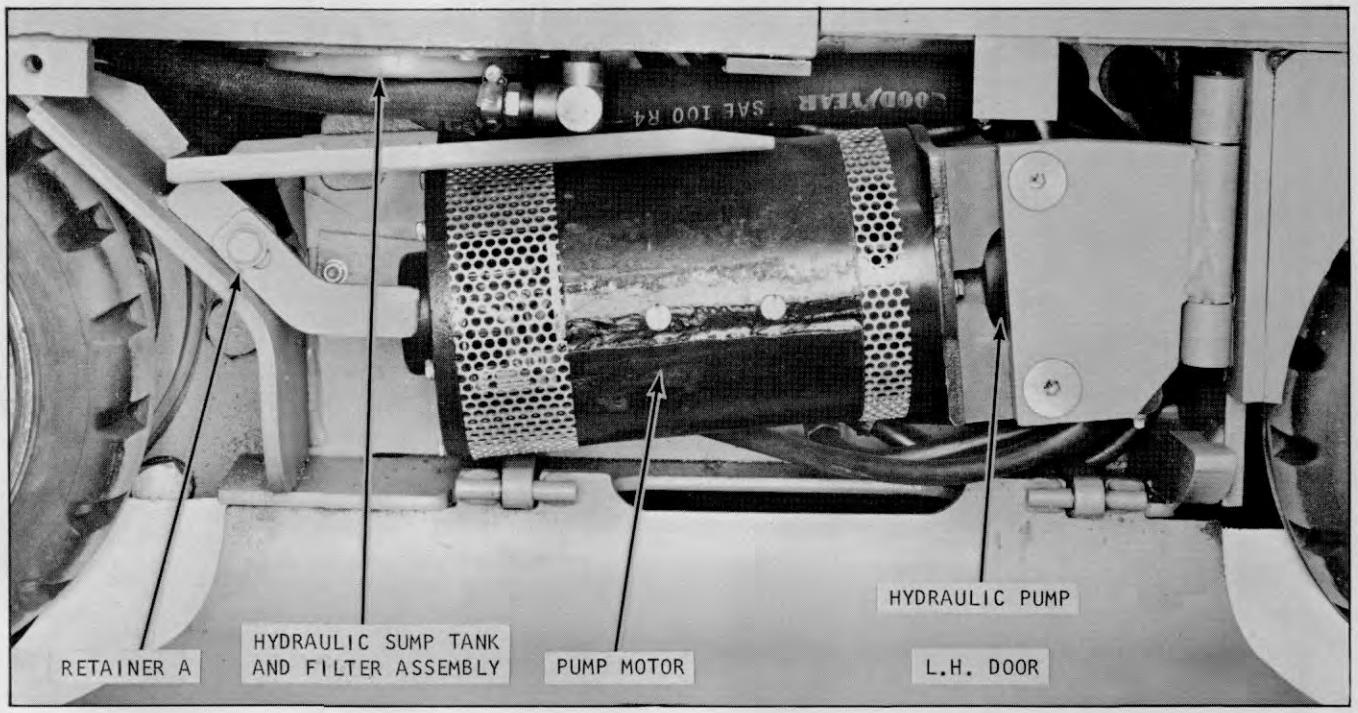

Plate 8661. Sump Tank, Filter and Pump

N O T E

*Continue on Page 500H 174 for remainder of draining and filling procedures.

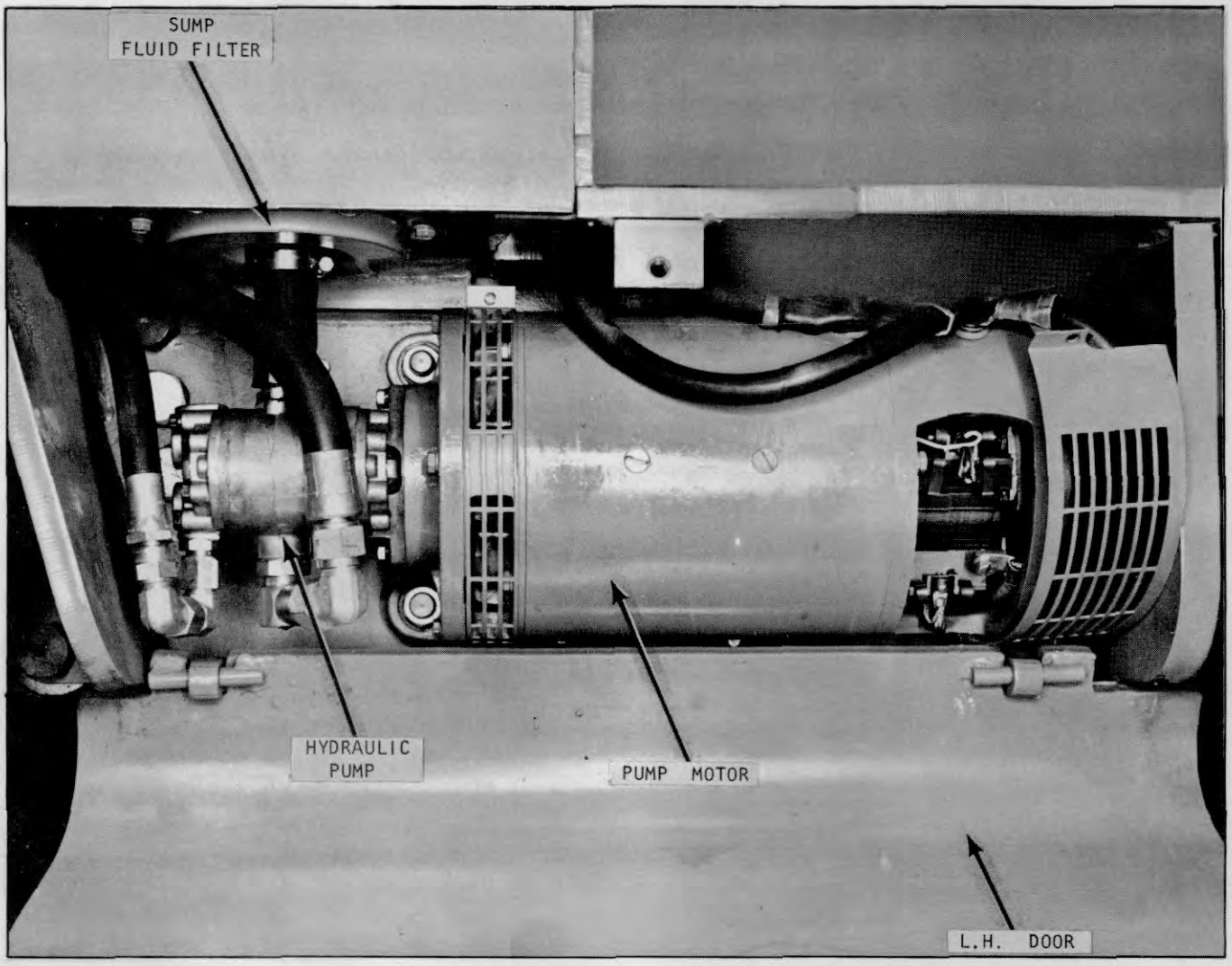

Plate 7556. Sump Tank, Filter and Pump

DRAIN SUMP TANK AND CHANGE HYDRAULIC FILTER ELEMENT

1. Lower upright. Turn power switch to off position.

2. Open both L.H. and R.H. frame doors to allow access to the sump tank drain plugs and hydraulic filter.

3. Remove sump fill plug from L.H. tank and sump breather from R.H. tank. Using a hose attached to a funnel, place unattached end of hose in a large container.

Remove drain plugs and allow tanks to thoroughly drain.

4. Flush each tank with about two quarts of clean hydraulic fluid.

CAUTION

DO NOT OPERATE HYDRAULIC PUMP WHILE SUMP TANK IS EMPTY AS DAMAGE TO HYDRAULIC PUMP WILL RESULT.

5. Disconnect hose and remove hydraulic filter retaining bolts.

6. Pull filter assembly out of sump tank and remove any remaining gasket material from mounting flanges.

7. Clean out any residue left in the sump cavity.

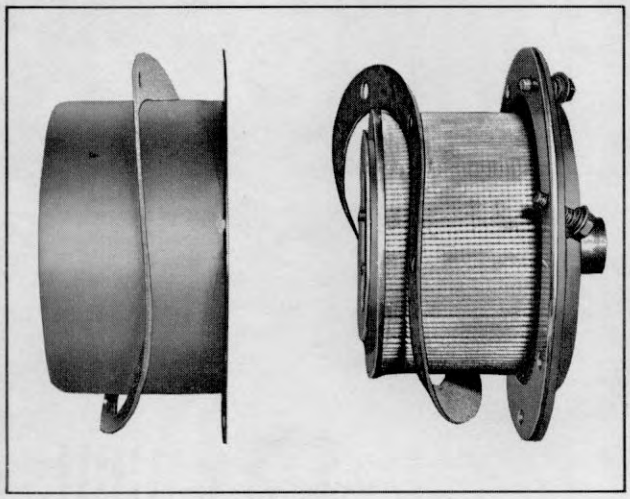

Plate 5274. Hydraulic Oil Filter

8. Install new filter element and gaskets to the filter housing and secure housing to the sump tank with the attaching capscrews.

N O T E

THE FILTER ATTACHING BOLTS SHOULD BE TIGHTENED TO 40 to 50 INCH POUNDS. IF THIS TORQUE IS EXCEEDED, DISTORTION OF THE HOUSING MAY OCCUR, CAUSING LEAKAGE.

9. Install filter to pump hose and tighten hose connections.

10. Replace drain plugs and fill sump tanks to within 1 1/2 to 2 inches of the filler hole. Only use hydraulic fluid per Clark Specifications MS-68. Operate hydraulic cylinders and recheck system for leaks. If there are no leaks present, close both the access frame doors and secure with fasteners provided. Replace fill plug and sump breather to their correct locations.

C A U T I O N

THE HYDRAULIC SYSTEM MUST BE KEPT CLEAN. IT MAY BE NECESSARY TO DRAIN, CLEAN AND REFILL THE SUMP TANK MORE OFTEN UNDER ADVERSE CONDITIONS. THIS IS BEST DETERMINED BY CHECKING HYDRAULIC FLUID FOR EVIDENCE OF DIRT, SLUDGE OR ANY FOREIGN MATTER AT PERIODIC INTERVALS. IF SUMP BREATHER BECOMES DIRTY REPLACEMENT IS NECESSARY.

STEERING GEAR

Steering gear adjustments must be made in the following manner (see Plates 6636 and 6637).

Always check worm bearing thrust adjustment, and adjust if necessary, before making sector gear lash adjustment.

Before making above adjustments, the following preliminary operations are necessary.

1. Disconnect steering drag link from pitman arm. Note relative position of drag link parts when disconnecting link so the parts may be re-assembled correctly.

2. Check lubricant level in steering gear housing. If low, add enough lubricant to bring level up to filler plug hole. (Use NLGI #1 Amolith grease EP #1 or its equivalent).

3. Tighten steering gear housing to frame side member bolts, see Plate 6636.

4. Determine straight-ahead position of steering mechanism by turning steering wheel to extreme right.

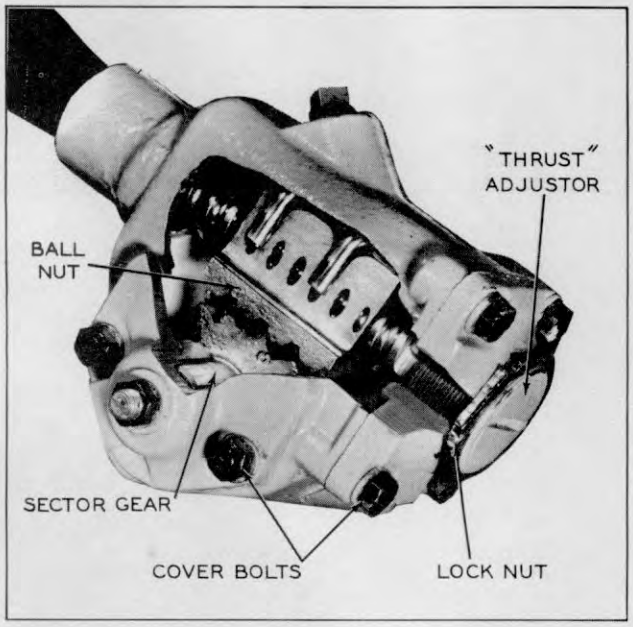

Plate 6636. Steering Gear Thrust Adjustment (Worm Bearings)

C A U T I O N

APPROACH EXTREME ENDS CAUTIOUSLY; WORM BALL NUT MUST NOT STRIKE ENDS WITH ANY DEGREE OF FORCE.

Then turn to extreme left, counting the exact number of turns from right to left end. Turn wheel back one-half number of wheel turns. Mark wheel with respect to steering column so center position may readily be found during adjustment procedures.

Worm Bearing THRUST Adjustment: Refer to Plate 6636 and proceed as follows:

1. Check tightness of cover bolts, see Plate 6636. Loosen lock nut and turn lash adjuster screw (Plate 6637) counterclockwise a few turns to provide clearance between sector gear and worm ball nut.

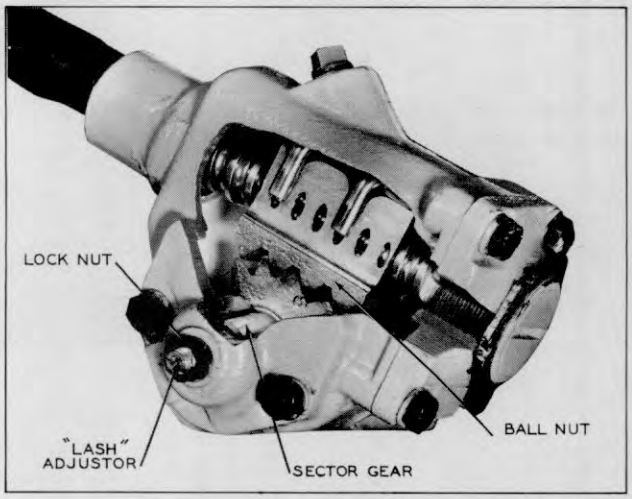

Plate 6637. Steering Gear Lash Adjustment (Sector Gear)

2. Turn steering wheel GENTLY to one extreme end. Turn wheel back one full turn. With spring scale on spoke of wheel, measure pull required to KEEP WHEEL MOVING. Pull on scale should be made at right angles to wheel spoke. If pull is within 1 1/2 to 2 pounds, proceed to lash adjustment in the following paragraphs. If pull is not within 1 1/2 to 2 pounds, adjust worm bearings. The pitman shaft adjustment must be made if worm bearing check is accomplished, or if the worm bearings are adjusted.

3. If it is necessary to adjust the worm bearings, loosen lock nut and then turn worm bearing adjuster nut clockwise until all end play is removed, see Plate 6636. Using

spring scale, as directed in Step 2, check pull and readjust as necessary; then tighten lock nut securely.

Sector Gear Lash Adjustment: Refer to Plate 6637 and proceed as follows:

1. Steering Gear Mechanism must be in straight ahead position as previously explained.

2. Turn lash adjuster screw clockwise to remove all lash between gear teeth. Tighten adjuster screw lock nut. Position spring scale on steering wheel so pull may be made at right angles to wheel spoke.

3. Measure pull while wheel is TURNED THROUGH CENTER POSITION. Readjust if reading is not within 2 1/2 to 3 pounds.

4. Tighten adjuster screw lock nut, check pull again.

5. After adjustments are made, install drag link on pitman arm.

N O T E

If steering linkage adjustment is necessary do not install drag link to pitman arm.

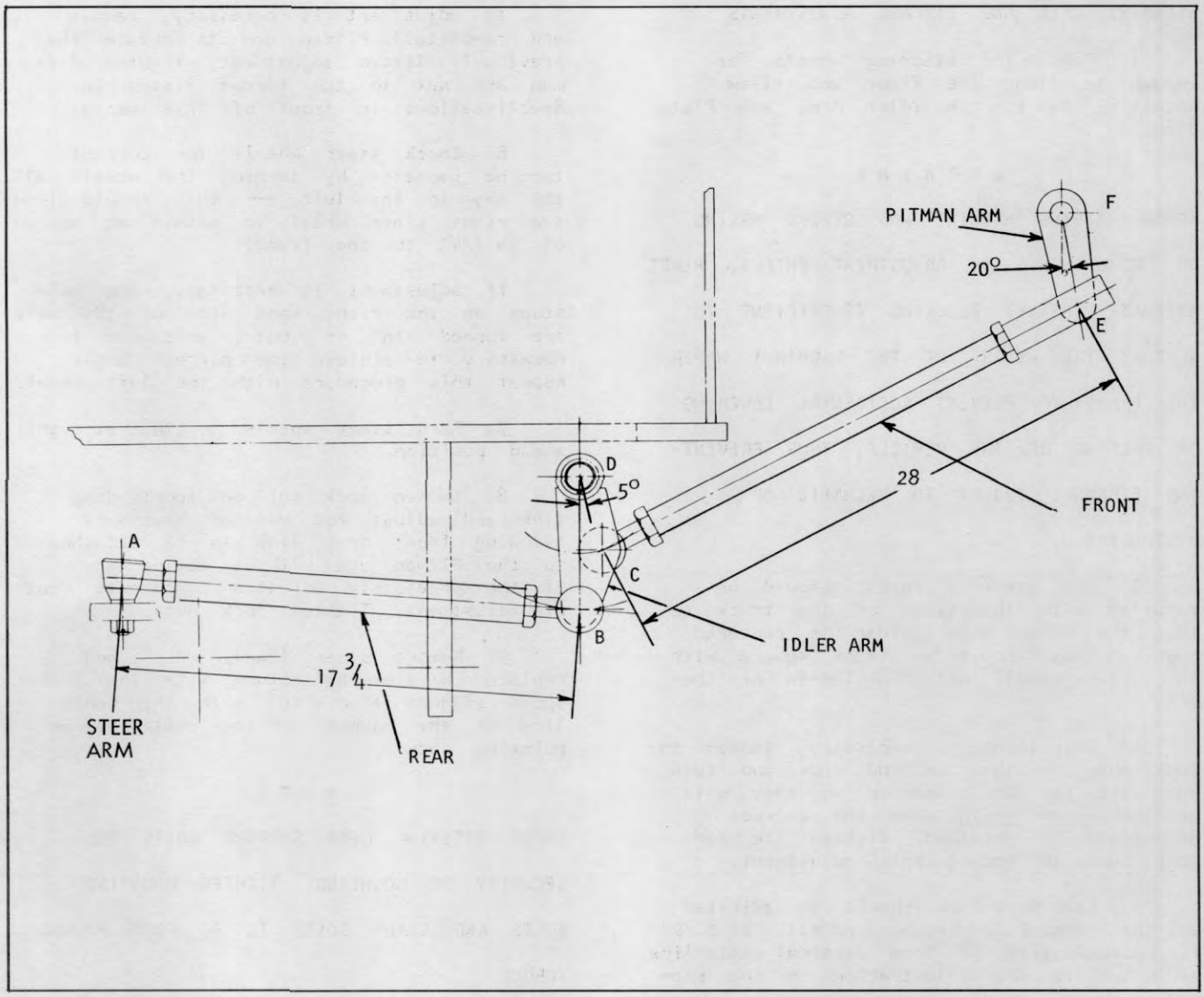

Plate 7569. Typical Steering Linkage (Side View)

Linkage Adjustment Specifications

Steer Gear (Manual Steering)

1. Center to R.H. turn, without drag link attached, takes 3.30 turns of hand wheel.

2. Center to L.H. turn, without drag link attached, takes 3.27 turns of hand wheel.

3. Total number of turns of hand wheel from full cramp to full cramp with the drag link attached is 6 turns.

4. Steer effort or hand wheel rim pull: (steer wheels on ground)

EC50, 47# + or - 10%
EC60, 55# + or - 10%
EC70, 65# + or - 10%

Steer Gear Overtravel (Manual Steering)

Over travel of hand wheel should be a minimum of 90° beyond the steer axle stops for both clockwise and counterclockwise rotation.

Steer Axle (Manual and Power Steering)

1. Turn angle of inside wheel: 76.5°

2. Turn angle of outside wheel: 54°15'

3. For linkage adjustment, refer to the following page.

STEERING AXLE AND LINKAGE ADJUSTMENTS

1. Raise the steering wheels far enough to clear the floor and allow accessibility to the Idler Arm, see Plate 7569.

W A R N I N G

AFTER RAISING MACHINE AND BEFORE MAKING ANY ADJUSTMENTS OR ADJUSTMENT CHECKS, PLACE ADEQUATE (HEAVY) BLOCKING (SUFFICIENT TO SUPPORT THE WEIGHT OF THE MACHINE) UNDER THE FRAME TO PREVENT ACCIDENTAL LOWERING OR FALLING OF THE VEHICLE, THUS PREVENTING PERSONAL INJURY TO MECHANIC OR BYSTANDERS.

2. The steering wheels should be parallel with the sides of the truck so that the steer axle spider is centered and so that the tires track square with the drive wheels with no toe-in or toe-out.

If adjustment is necessary, loosen the lock nuts at the tie rod ends and turn each tie rod in a manner so they will be the <u>same length</u> when the correct adjustment is obtained. Tighten tie rod lock nuts to secure this adjustment.

3. Rear drag link should be adjusted so that centerline between points "B" & "D" is approximately 5° from vertical centerline as shown in the illustration on the preceding page.

If adjustment is necessary, loosen the lock nuts at the drag link rod ends and turn drag link until the correct adjustment is obtained. Tighten drag link lock nuts to secure this adjustment.

4. Center steer hand wheel (steer gear) between full right and full left cramp. Refer to "Steering Gear Adjustments" listed on the preceding pages for correct procedure. (Do not install front drag link until later.)

5. Pitman arm should be adjusted so that centerline between Points "E" & "F" is approximately 20° from vertical in direction shown in the preceding illustration. (This rotates Pitman arm two serrations towards front of truck.)

If adjustment is necessary, remove and re-install Pitman arm to obtain the previously listed adjustment. Tighten Pitman arm nut to the torque listed in Specifications in front of this manual.

6. Check steer wheels for correct turning geometry by turning the wheels all the way to the left — this should allow the right steer wheel to attain an angle of $54\ 1/4^{\circ}$ to the frame.

If adjustment is necessary, the axle stops on the right hand side of the axle are turned "in" or "out", whichever is necessary to achieve the correct angle. Repeat this procedure with the left wheel.

7. Turn steer wheels to the straight ahead position.

8. Loosen lock nut on front drag link and adjust rod end as necessary allowing front drag link to be attached to the Pitman arm without moving any of the previously adjusted components "out" of adjustment. Tighten lock nut.

9. Remove steer (hand) wheel and replace on steering column with the center spoke aligned + or - 10° with the center line of the machine — the center spoke pointing back.

N O T E

CHECK STEERING GEAR SUPPORT BOLTS FOR SECURITY OF MOUNTING. TIGHTEN MOUNTING BOLTS AND CLAMP BOLTS TO 90 FOOT POUNDS TORQUE.

10. If interferences are encountered during steer linkage travel between full right to full left turn, linkage is misadjusted — repeat Steps 2 thru 8 until correct adjustments are obtained. Repeat Step 9 if necessary, after completing Steps 2 thru 8.

11. Remove blocking from under machine frame and lower vehicle to the floor.

N O T E

IF NEW COMPONENTS WERE INSTALLED FOR ANY REASON, BE SURE TO PROPERLY LUBRICATE AS INSTRUCTED IN THE LUBRICATION CHART ON PAGE 100H 773.

STEERING AXLE AND LINKAGE ADJUSTMENTS (VEHICLES EQUIPPED WITH POWER STEERING)

Specifications

1. Center to R.H. turn, without drag link attached, takes 2.7 turns of hand wheel.

2. Center to L.H. turn, without drag link attached, takes 2.76 turns of hand wheel.

3. Total number of turns of hand wheel from full cramp to full cramp with the drag link attached is 5 turns.

4. Steer effort or hand wheel rim pu.. (steer wheels on the ground): 3/4 to 1 1/2 lbs.

+ +

+ Refer to preceding page [500H 303] and follow the procedure outlined for manual steering, then continue with paragraph below for adjusting the power steering cylinder. +

+ +

Vehicles Equipped with Power Steering

Refer to Plate 7569 on page 500H 302. As you will note the rear drag link is connected to the spider steer arm (at item "A") of the steer axle. The rod end of the steer cylinder is connected to another arm on the spider assembly, while the base end or anchor end of the steer cylinder is attached to the vehicle frame.

With cylinder in retracted position, measure the distance between center line of rod end to center line at anchor end (center line of retainer pin that anchors the steer cylinder to the vehicle frame). This distance should be 18 1/16 inches.

[This adjustment will provide approximabely 3/16 inches between the end of the piston and the end of the cylinder case, preventing the steer cylinder from bottoming out when turning in either direction.]

If the distance is incorrect, rotate rod end until specified distance is obtained. Tighten clamp bolt nut to 30 - 40 lbs. torque.

[Unless the steer cylinder is disconnected, removed for repair or replacement, adjustment should not be necessary after original factory installation.]

1000 HOURS

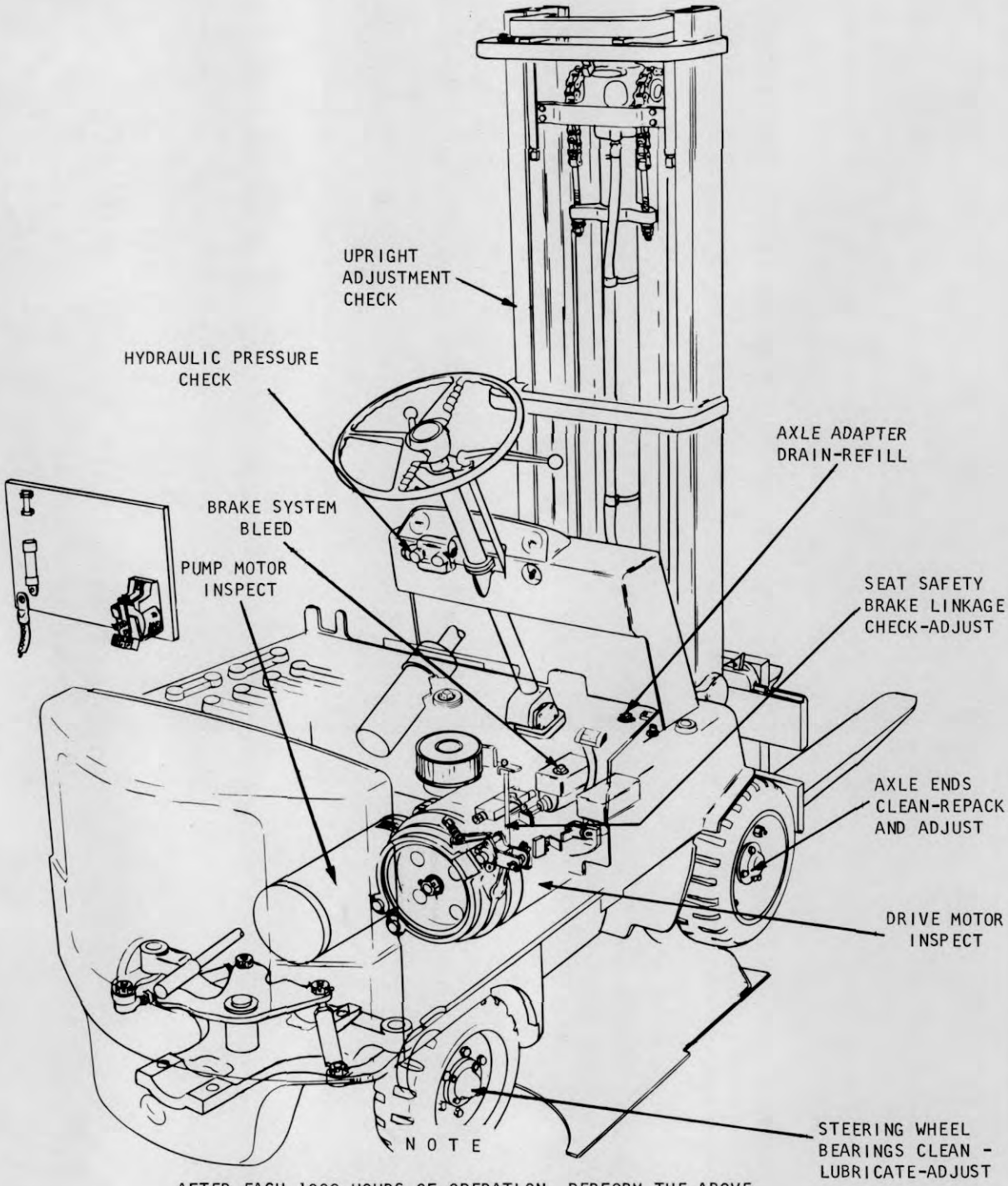

NOTE

AFTER EACH 1000 HOURS OF OPERATION, PERFORM THE ABOVE SERVICES IN ADDITION TO THE ONES LISTED ON THE 8 HOUR, 100 HOUR AND 500 HOUR LUBRICATION AND PREVENTIVE MAINTENANCE ILLUSTRATIONS.

Plate _____ Lubrication and Preventive Maintenance Illustration

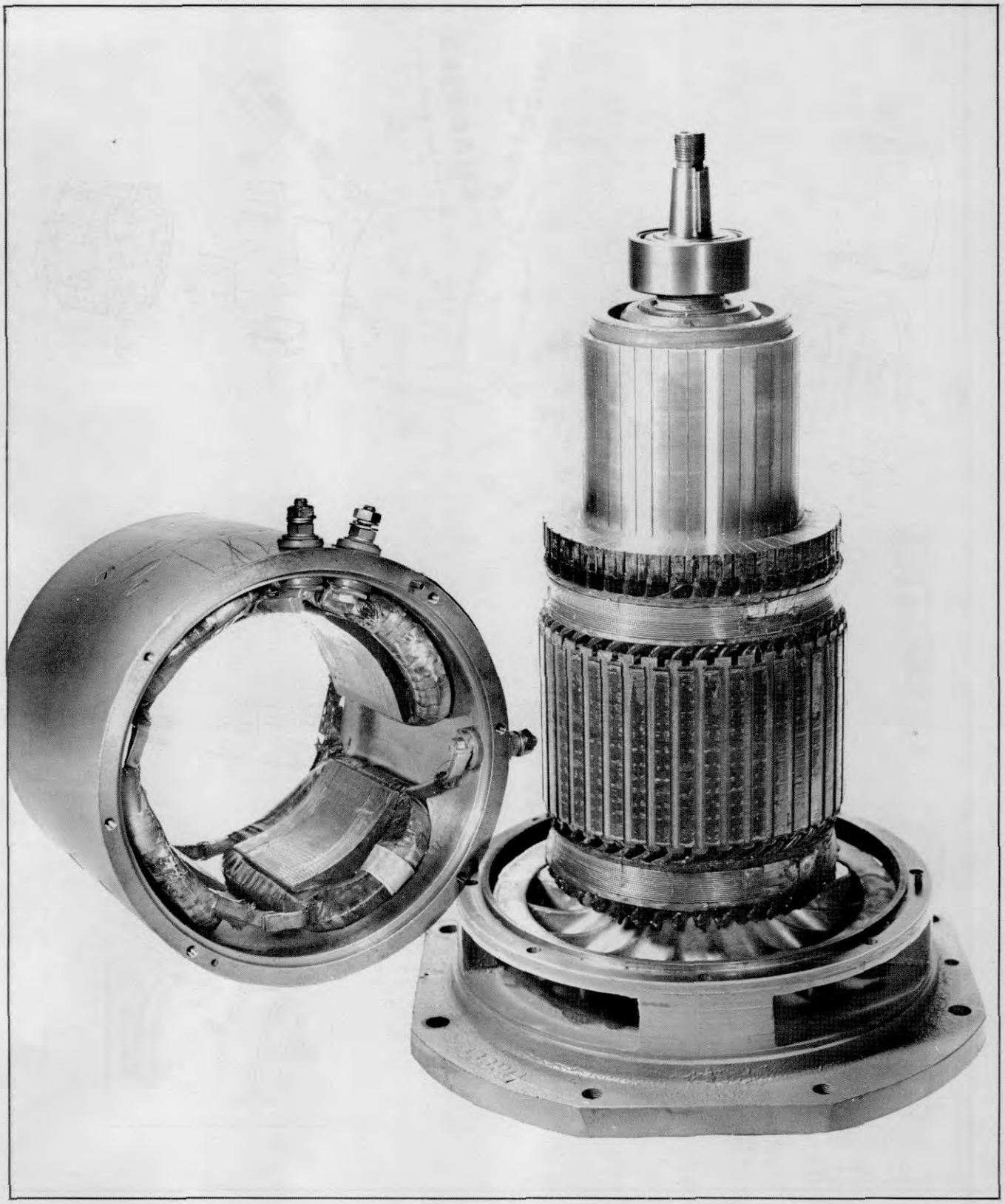

Plate 7562. Typical Drive Motor Assembly

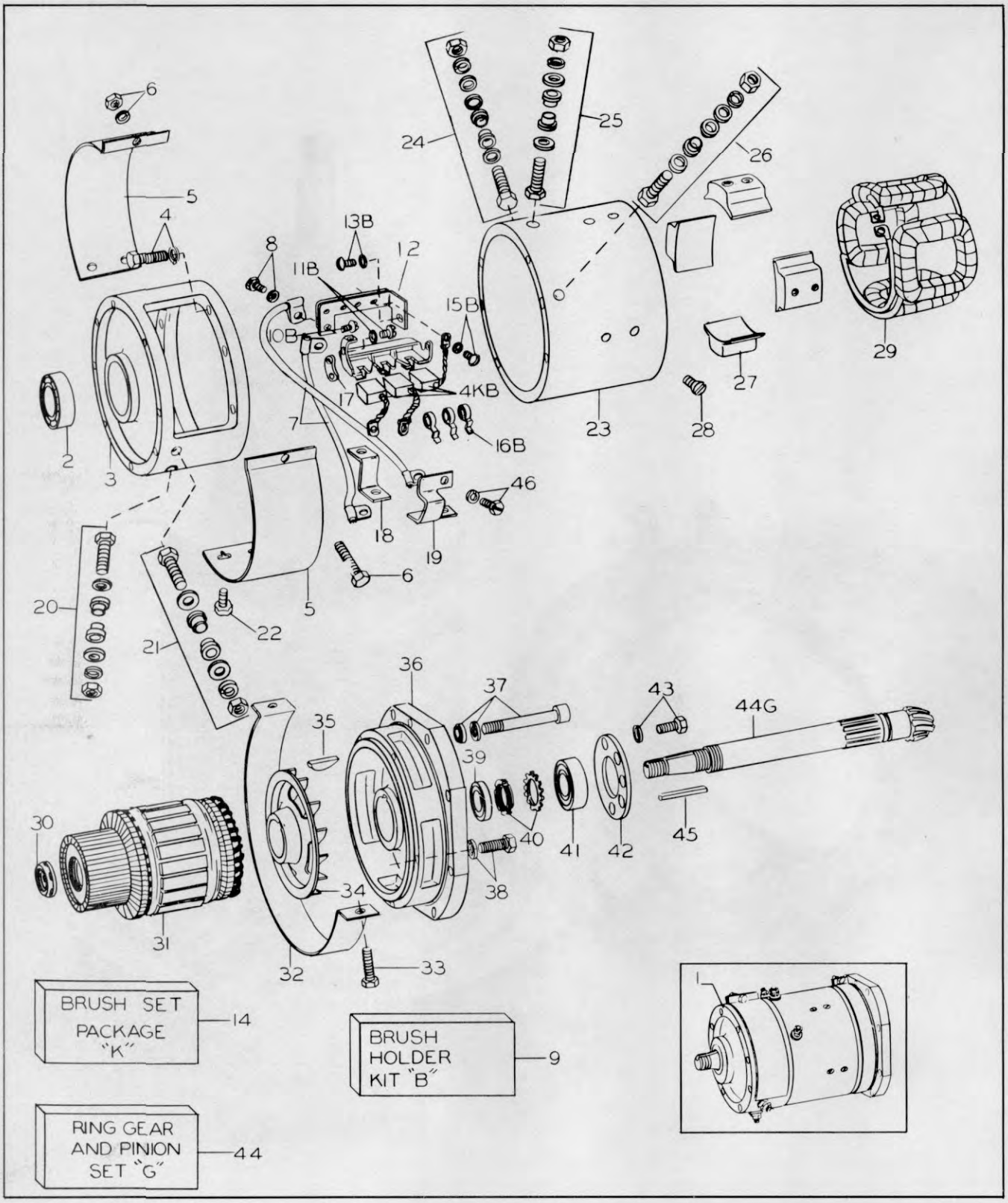

Plate 7565. Typical Drive Motor (Disassembled View)

MOTOR INSPECTION AND CHECKS

Wiring: Inspect all connecting wires to be sure they are secure. Insulation should not be worn or damaged.

Commutator: If commutator is glazed or dirty clean with a strip of No. 00 sandpaper. Blow out all dirt and grit with compressed air.

C A U T I O N

DO NOT USE EMERY CLOTH TO CLEAN COMMUTATOR.

Brushes: The brushes should slide freely in their holders and make full contact on the commutator. Worn brushes (worn beyond half the original length) should be replaced. Badly chipped, broken or oil soaked brushes should also be replaced. Brushes may be wiped with a dry clean cloth to remove loose particles of dirt.

N O T E

DO NOT CLEAN THE BRUSHES IN ANY KIND OF SOLVENT OR ALLOW THEM TO COME IN CONTACT WITH GREASE OR OIL.

Check brush spring tension with a spring scale. To check reaction type brush springs, hook the scale under the brush spring near the brush and pull on a line parallel with the side of the brush. Take the reading just as the spring leaves the brush. To assist in telling the exact instant that the pressure is relieved, a small strip of paper can be placed under the brush. Pull slightly on the paper and the paper will slip out at the correct instant for reading the spring scale.

If the brush spring tension is too great, the commutator and brushes will wear excessively and result in short life. If the brush spring tension is too low, there will be a loss of efficiency due to poor brush contact.

To change brush spring tension, twist the spring at the holder with long nose pliers.

C A U T I O N

DO NOT ALLOW SPRING TO SNAP DOWN ON A BRUSH.

Refer to Specifications for correct brush spring tension.

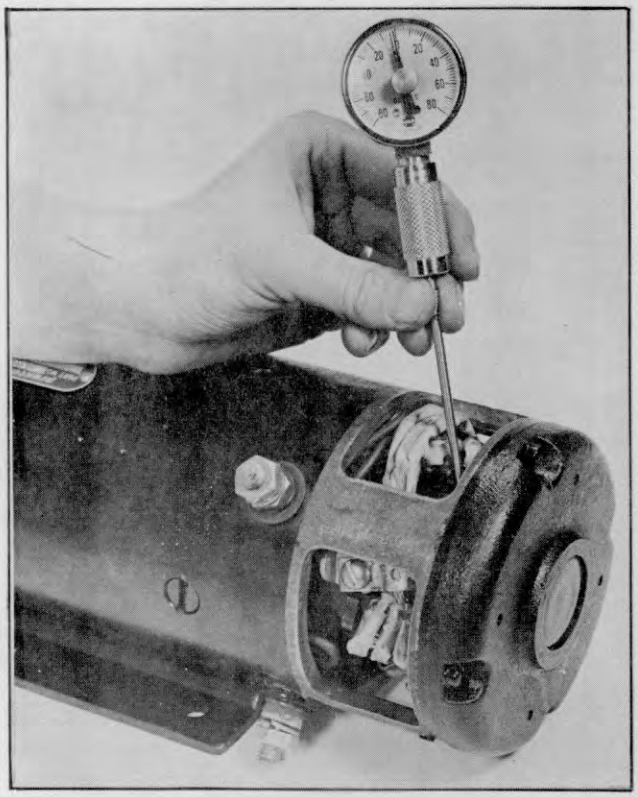

Plate 6560. Typical Method Checking Brush Spring Tension

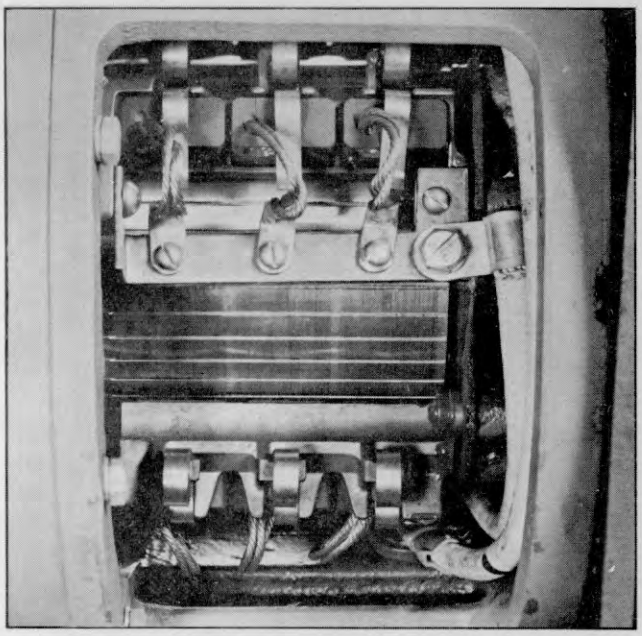

Plate 7564. Typical Motor Brushes

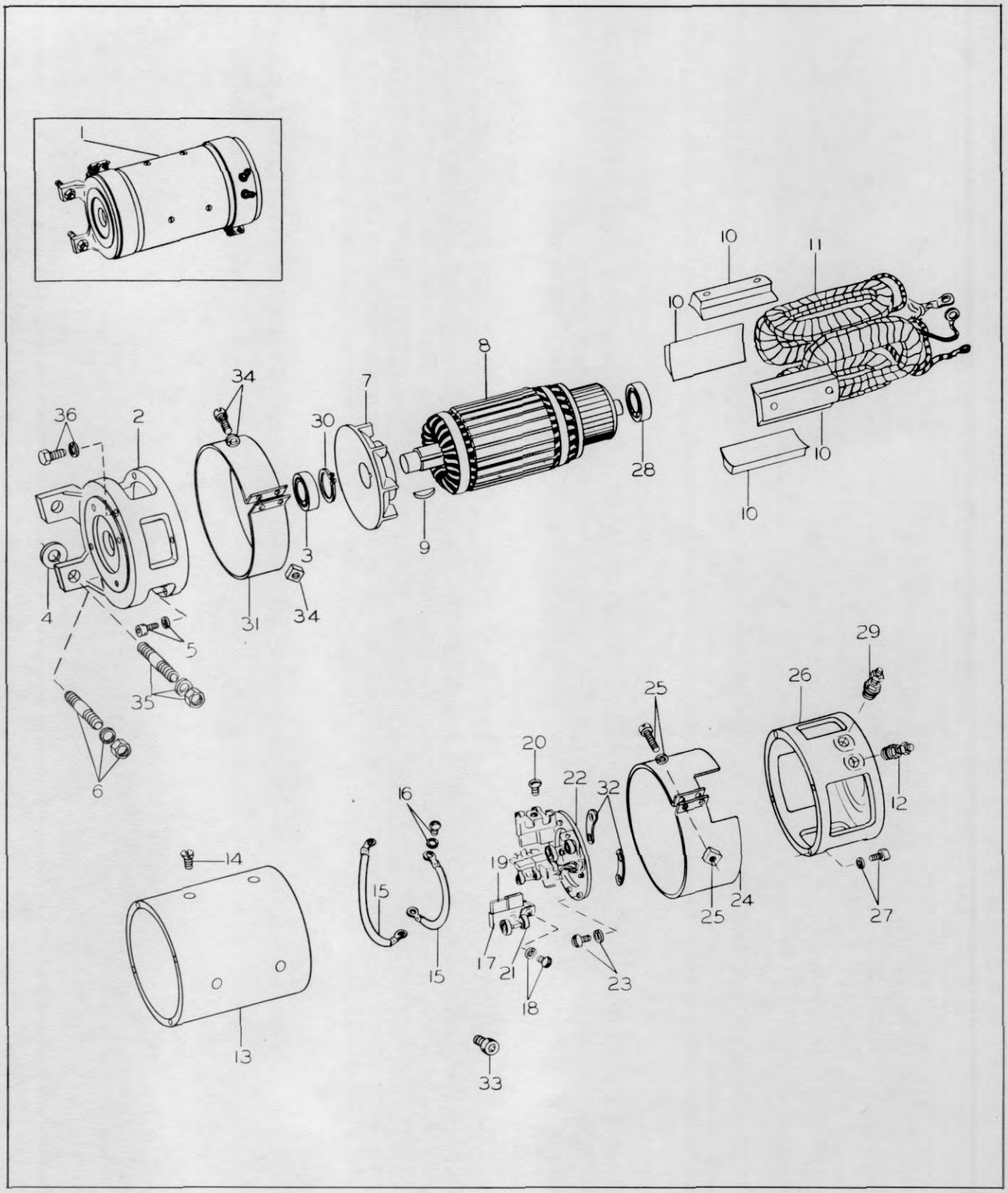

Plate 7563. Typical Pump Drive Motor
(Refer to preceding page 1000H 673 for Inspection and Checks)

Plate 6640. Typical Wheel Bearings

STEERING WHEEL BEARINGS

Adjustment

1. Raise rear of machine so that tires clear floor.

> WARNING
>
> AFTER RAISING MACHINE AND BEFORE MAKING ANY ADJUSTMENTS OR ADJUSTMENT CHECKS, PLACE ADEQUATE (HEAVY) BLOCKING (SUFFICIENT TO SUPPORT THE WEIGHT OF THE MACHINE) UNDER THE FRAME TO PREVENT ACCIDENTAL LOWERING OR FALLING OF THE VEHICLE, THUS PREVENTING PERSONAL INJURY TO MECHANIC OR BYSTANDERS.

2. Inspect adjustment of bearings by gripping top and bottom of tire, chuck tire "in" and "out" to determine looseness or wobble.

NOTE

Before making wheel bearing adjustments, be sure play (looseness or wobble) is in the wheel bearings and not in the king pins.

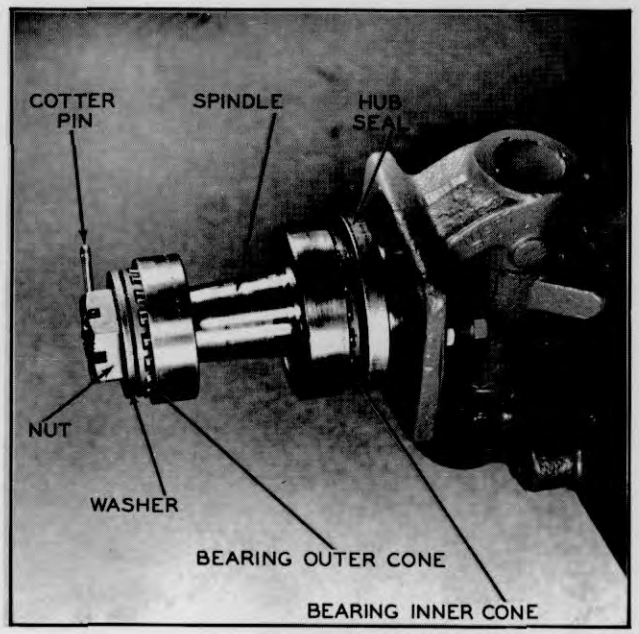

Plate 6703. Typical Wheel Bearings

NOTE

If wheel bearings need adjusting, clean and repack bearings before making adjustments. Refer to lubrication paragraph. Before repacking wheel bearings, check for any indication of leakage around hub seals. If such a condition exists, report to designated person in authority.

3. If looseness or wobble is in the wheel bearings, remove hub cap and spindle cotter pin, see (Plate 6640). Tighten nut with a 12" wrench, and at the same time rotate the wheel in one direction and then in the other until there is a slight bind to be sure all bearing surfaces are in contact. Then back off the nut 1/6 to 1/4 turn allowing the wheel to rotate freely. Secure nut at this position with a new cotter pin and replace hub cap.

Lubrication

1. Remove wheels after 1000 hours or every six months of operation. Clean bearings and repack with NLGI #1 (Amolith grease EP #1 or its equivalent.)

2. Install wheels and adjust wheel bearings as previously described.

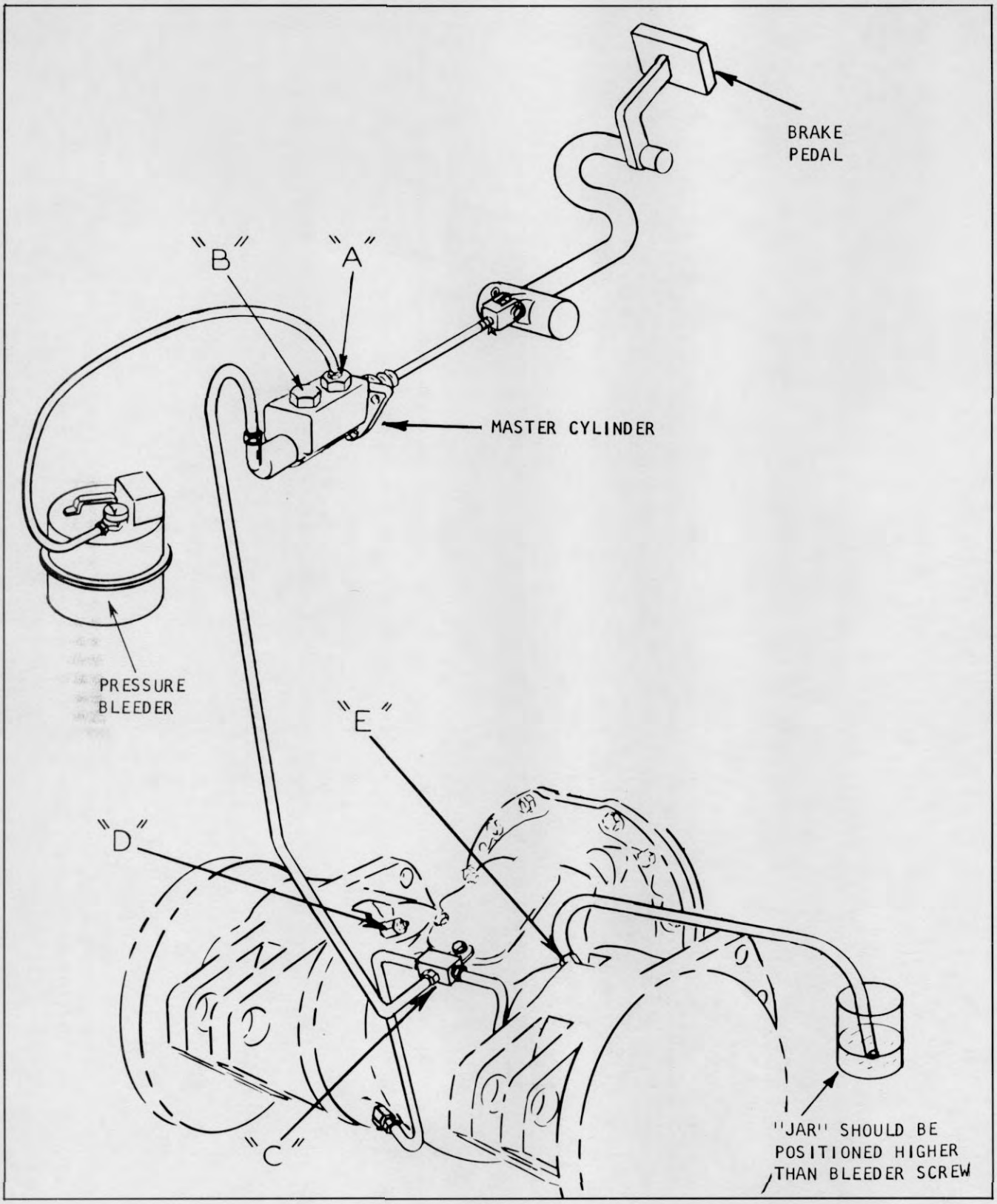

Plate 7566. Bleeding Brakes

BRAKE BLEEDING PROCEDURE

Proper operation of the hydraulic brake system requires a solid column of fluid without air bubbles at all points in the pressure system. Under certain conditions it becomes necessary to bleed fluid from the system in order to expel air bubbles which have become mixed with the fluid. The necessity of bleeding is indicated by a soft spongy pedal, or at any time a brake line is removed (or broken) the system must be bled.

Step 1. Tilt upright back. Place solid heavy blocks under each upright rail. Tilt upright forward until vertical to the floor. This should allow the drive wheels to clear the floor. If the bleeder screws are not accessible with the drive wheels on the machine, the wheels should be removed.

N O T E

MACHINES EQUIPPED WITH PNEUMATIC TIRES, DEFLATE TIRES BEFORE REMOVING DRIVE WHEELS FROM MACHINE.

Step 2. Check the brake pedal free travel (see Specifications). Clean dirt from around the vented filler cap of the master cylinder reservoir. Brake fluid should be within 1/4 of an inch from the top. With filler cap off the master cylinder, depress and release brake pedal. A small displacement of fluid should be noticed in the reservoir. If this happens, the brake pedal (upon being released) is returning the master cylinder piston to its normal position to open a cylinder port. This port must be open. If fluid does not return to the reservoir (when releasing brake pedal), this indicates improper pedal free travel and a pedal adjustment is required.

Step 3. To properly bleed the system it is recommended that a pressure bleeder filled with about two quarts of S.A.E. 70R-3 heavy duty brake fluid be connected to the master cylinder reservoir point "A". Pressure bleeder should then be pressurized to approximately 20 P.S.I.

Step 4. Loosen plug "B" to permit air to escape from reservoir. Tighten plug after oil appears around plug.

Step 5. Loosen tube nut "C" and allow all air to escape. Tighten tube nut.

Step 6. Install a bleeder hose on bleeder screw "D" and submerge the unattached end of the hose in a clean transparent jar containing several inches of brake fluid. NOTE: DURING BLEEDING OF THE WHEEL CYLINDERS, THE JAR SHOULD BE ELEVATED TO A POSITION HIGHER THAN THE BLEEDER SCREW MAKING SURE THAT THE END OF THE HOSE REMAINS SUBMERGED IN THE FLUID AT ALL TIMES. Loosen bleeder screw and slowly push brake pedal to the floorboard and hold pedal in this position until bleeder screw is retightened. Repeat this operation until all air bubbles disappear and clear fluid is being pumped into the jar.

Step 7. Install bleeder hose on the remaining bleeder screw "E" and proceed as in Step 6.

Step 8. After all bleeding has been completed close the pressure bleeder shut-off cock and loosen hose connection at master cylinder to allow pressure to escape. Replace master cylinder vented cap.

Step 9. If drive wheels were removed from the machine replace them. (Inflate tires if they are of the pneumatic type). Tilt upright back and remove blocking from under each upright rail.

If a pressure bleeder is unavailable, the system may be bled manually by following Steps 1, 2, 5, 6, 7 and 9. It must be remembered that the brake pedal should be depressed slowly and held to the floorboard until the line connections or bleeder screws are securely tightened. This prevents the possibility of air being drawn into the system during the bleeding operation. Check master cylinder reservoir level periodically during manual bleeding and fill to within 1/4 of an inch of the top as required.

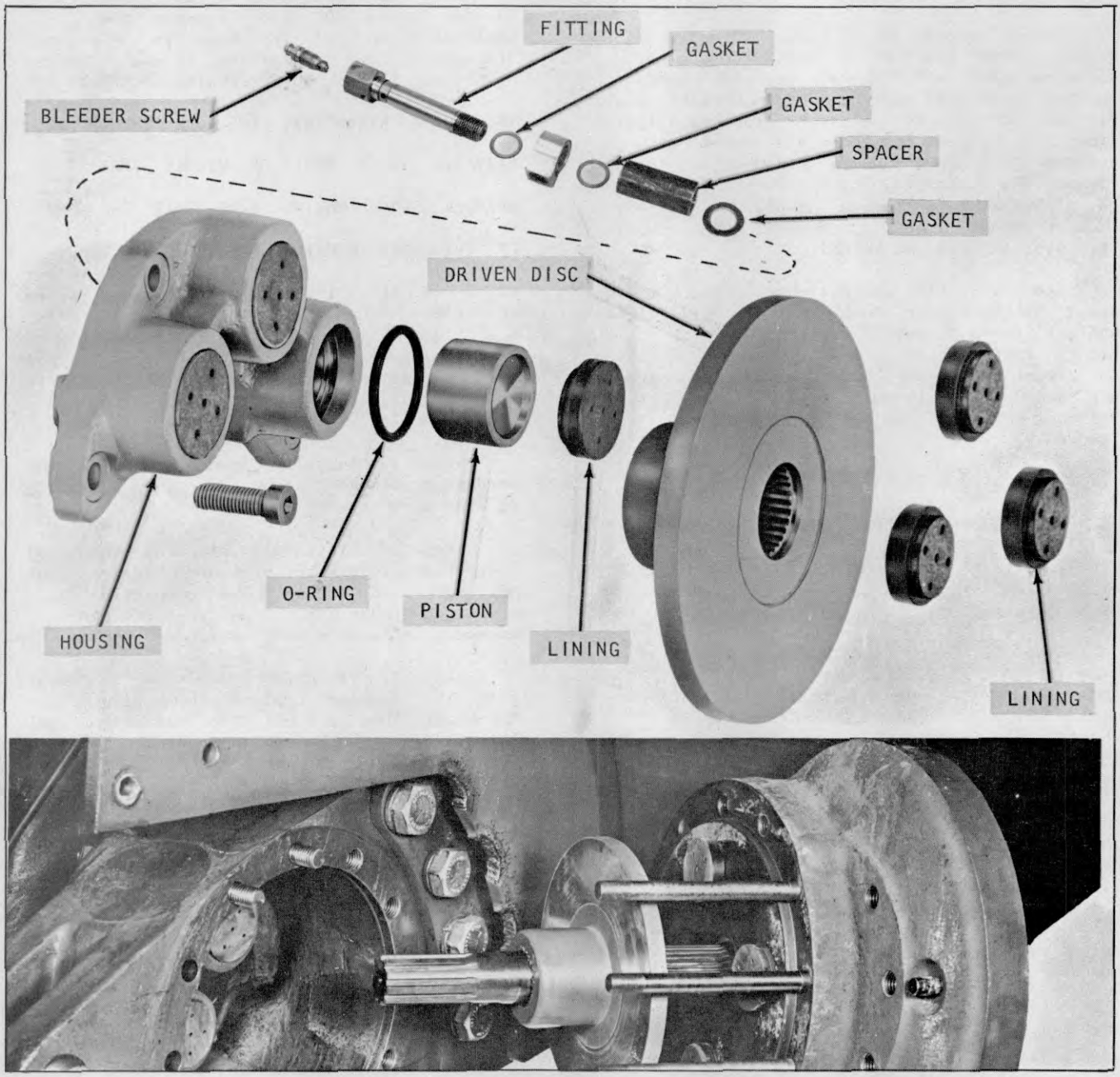

Plate 7567. Typical Service Wheel Brake Assembly

DESCRIPTION

When depressing the brake pedal hydraulic pressure is applied to the brakes, the pistons move out clamping the rotating disc between the pistons and anvil linings producing the braking action. When hydraulic brake pressure is released the clamping action is removed and the disc is again free to rotate.

If it is found that the brake effectiveness has gradually dropped to a noticeable degree (and the system has been properly bled and pedal free travel is adjusted correctly) the linings are worn beyond their designed limits. If lining wear has reached this point, the replacement of linings is necessary. Report to designated person in authority.

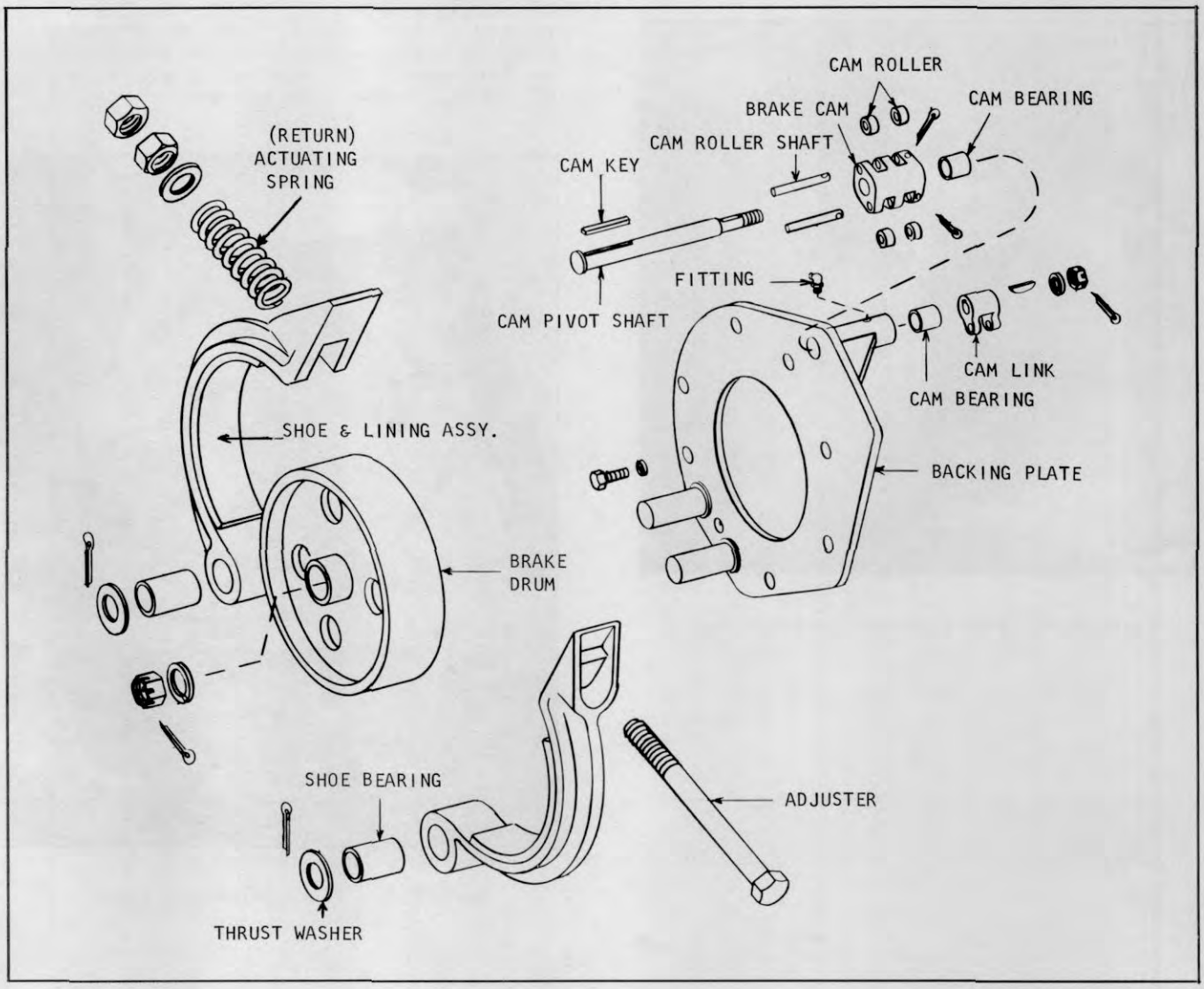

Plate 7568. Seat Safety (Parking) Brake

SEAT SAFETY BRAKE (PARKING BRAKE)

1. The parking brake is mounted to the end of the drive motor and is operated by means of linkage attached to the driver's seat.

2. When properly adjusted, the brake cam will, with action of the seat linkage, raise new brake shoes off of the drum 1/8 inch at a point half way between the shoe pivot and the brake cam pivot. The gap will increase as the shoe lining wears. (Refer to the next page.)

3. Adjust seat return spring tension to allow the seat to raise as soon as the driver leaves the seat.

4. With the return spring installed the bottom of the seat plate should form an angle of 40 degrees with the top of the hood when brakes are applied.

5. The brake shoe return spring should be adjusted to a length of approximately 2 1/2 inches to enable the brake to meet the following specifications.

SEAT BRAKE EFFECTIVENESS

The brake must be capable of holding the truck with full rated load on a 15% grade. To Test: Disconnect seat linkage pin (Plate 7410). The driver should be seated on the truck with all power off. (Refer to following page.)

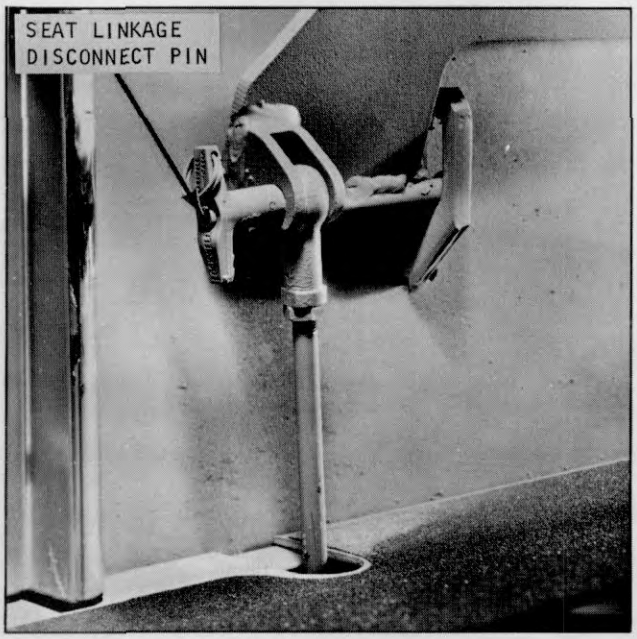

Plate 7410. Seat Linkage Disconnect Pin

If adjustment is necessary, rotate adjustor (shown with arrows on preceding page) as required to provide spring tension capable of holding truck on a 15% grade. Recheck adjustment.

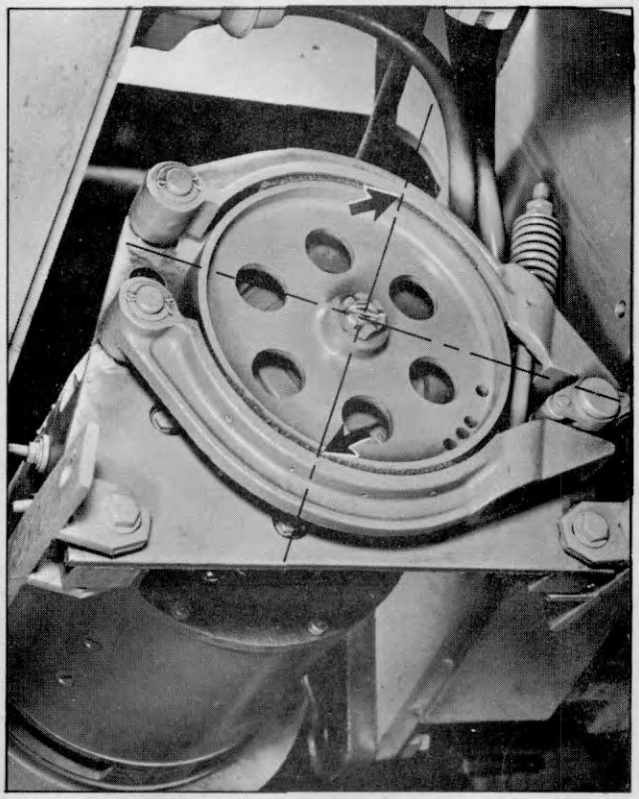

Plate 7570. Brake Adjustment Check

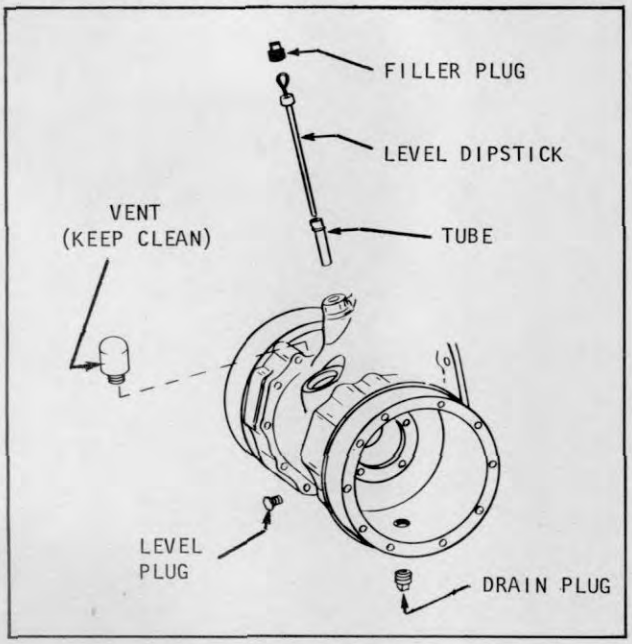

Plate 7549. Typical Axle Adaptor

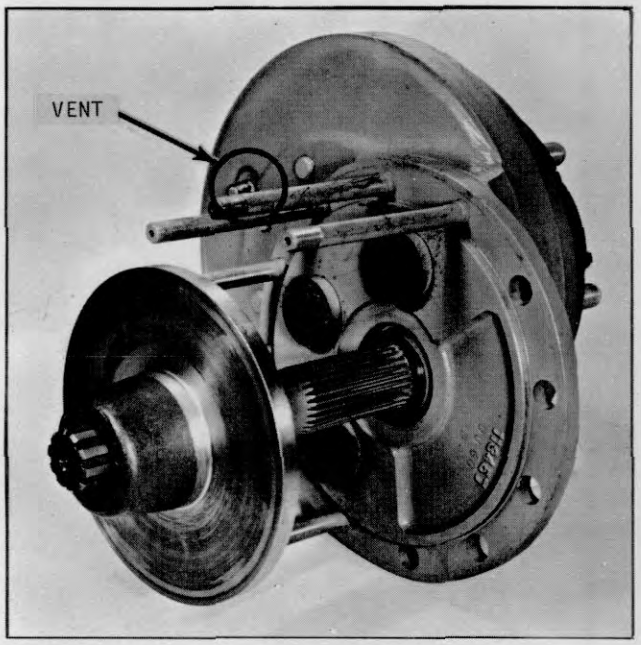

Plate 7550. Typical Axle Adaptor Vent

AXLE ADAPTOR....DRAIN AND REFILL

Drain and refill every 1000 operating hours at operating temperature. Remove drain plug from bottom of adaptor allowing old lubricant (or fluid) to completely drain. Replace drain plug.

Clean dirt from level device (plug or dipstick) and remove. Fill with the recommended lubricant or fluid....refer to following paragraph....until fluid or lubricant reaches the plug opening or high mark on dipstick. Do not overfill as the excess quantity will serve no useful purpose. If the level is too high it will cause excessive churning and attendantly high lubricant or fluid temperature and possible leakage.

Use Type "A", Suffix "A", Automatic Transmission Fluid (fluid containers must display a qualification number prefixed by "AQ-ATF"...Clark Part Number 879803) or Dexron Automatic Transmission Fluid in all vehicles beginning with the following machine serial number:

EC-----1-831 and above

Use E.P.G.L. S.A.E. #90 Gear Lubricant (Per Clark Specifications MS-8) in all machines built prior to the above listed machine serial numbers.

AXLE ADAPTOR VENT

Inspect vent to be sure it is free of obstructions. If vent is not open remove and clean in a Stoddard type cleaning solvent. Be sure vent is completely dry before replacing on axle.

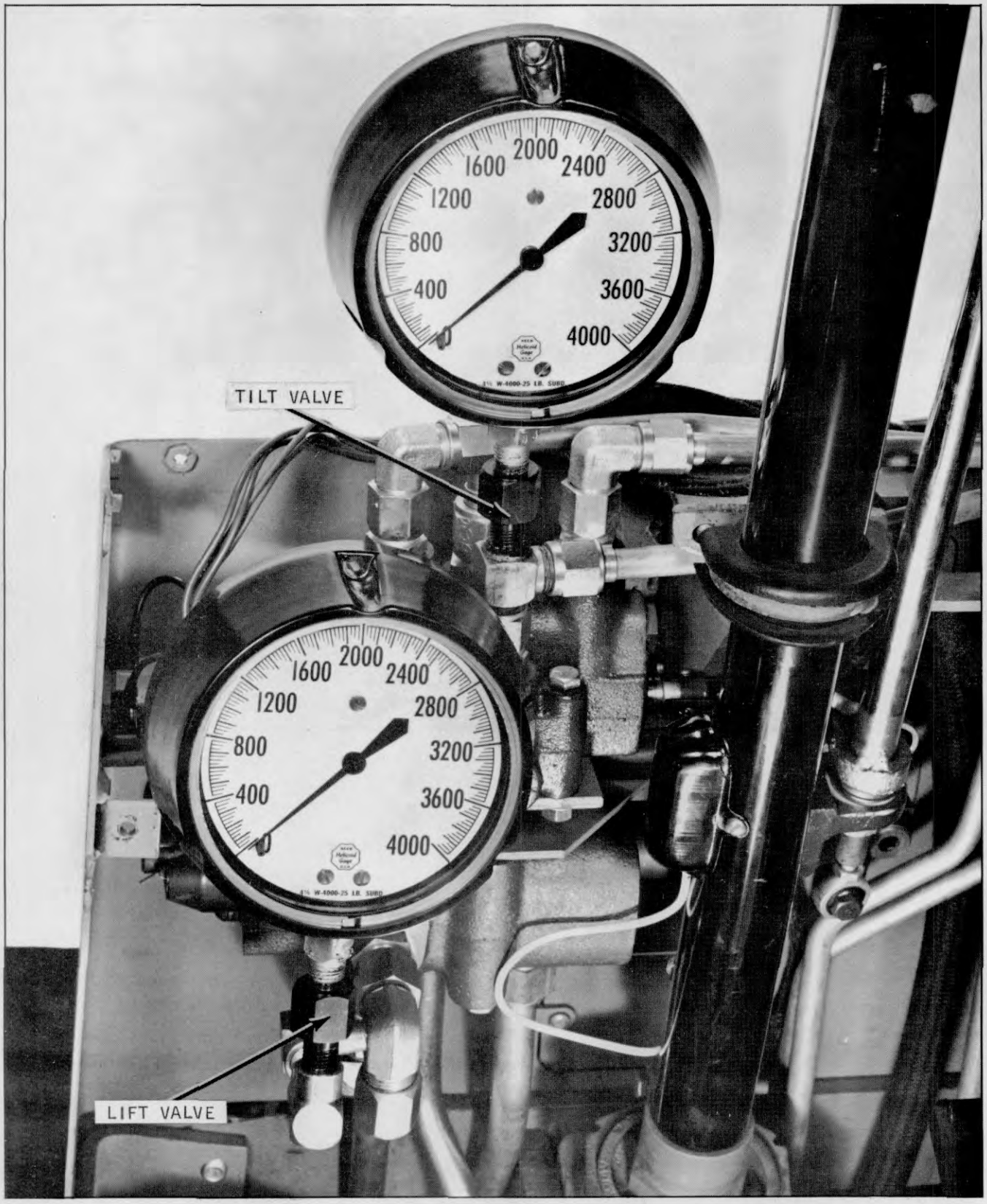

Plate 7226. Typical Control Valve

MAIN HYDRAULIC SYSTEM PRESSURE CHECK

1. Pressure check at lift valve.

a. Remove the pressure check plug from the lift valve (Plate 7224) and install a 0-4000 P.S.I. gauge at this location.

b. Turn key switch on and move hydraulic control lever to the "lift" position. When the upright has reached its maximum height the gauge should register 1750 to 1800 P.S.I. If pressure is not within this range report to designated person in authority.

N O T E

DO NOT HOLD LIFT LEVER IN "LIFT" POSITION FOR ANY PROLONGED PERIOD AFTER UPRIGHT HAS REACHED IT MAXIMUM HEIGHT. THIS WILL CAUSE HEATING OF THE HYDRAULIC OIL AND SHOULD BE AVOIDED.

c. If pressure readings are satisfactory remove pressure gauge and install plug securely.

N O T E

ONLY REPRESENTATIVES OF AN AUTHORIZED CLARK INDUSTRIAL TRUCK DEALER OR THE VENDOR SHOULD REPAIR OR ADJUST THE CONTROL VALVES.

2. Pressure Check at Tilt Valve.

a. Provide a means for connecting a 0-4000 P.S.I. pressure gauge at the inlet side of the valve (refer to Plate 7224). A tee at the inlet port may be used.

b. Turn key switch on and hold tilt lever back until upright reaches maximum back tilt. With the lever held momentarily in this position the pressure gauge should register 1750 to 1800 P.S.I. If pressure is not within this range report to designated person in authority.

c. If pressure readings are satisfactory remove pressure gauge and securely install inlet line in its original position.

UPRIGHT CARRIAGE ROLLER ADJUSTMENT

A. CARRIAGE REMOVAL

Before working on the upright, set parking brake and block drive wheels.

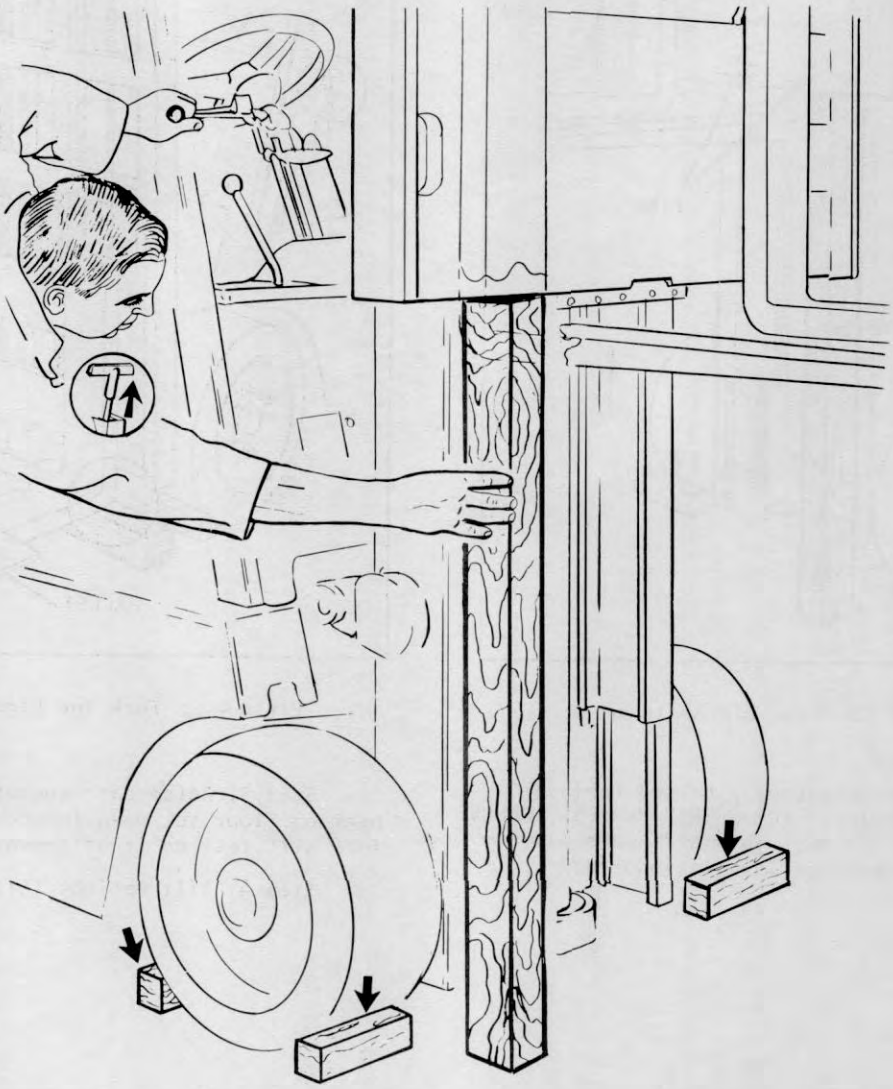

Plate 9559 Blocking Machine and Carriage

Step 1. Raise carriage about 4 feet. Place a 4" x 4" oak beam 3 to 4 feet in length between carriage and floor as shown. DO NOT STAND DIRECTLY UNDER FORKS. Standing to one side, lower carriage onto beam as shown.

X X X X X X X X X X X X X X X X X X X X X X X X X X X X X X X X X X X X X X X X X X X X X X X X

WARNING

BEFORE WORKING ON UPRIGHT, SET PARKING BRAKE AND BLOCK DRIVE WHEELS AS SHOWN

X X X X X X X X X X X X X X X X X X X X X X X X X X X X X X X X X X X X X X X X X X X X X X X X

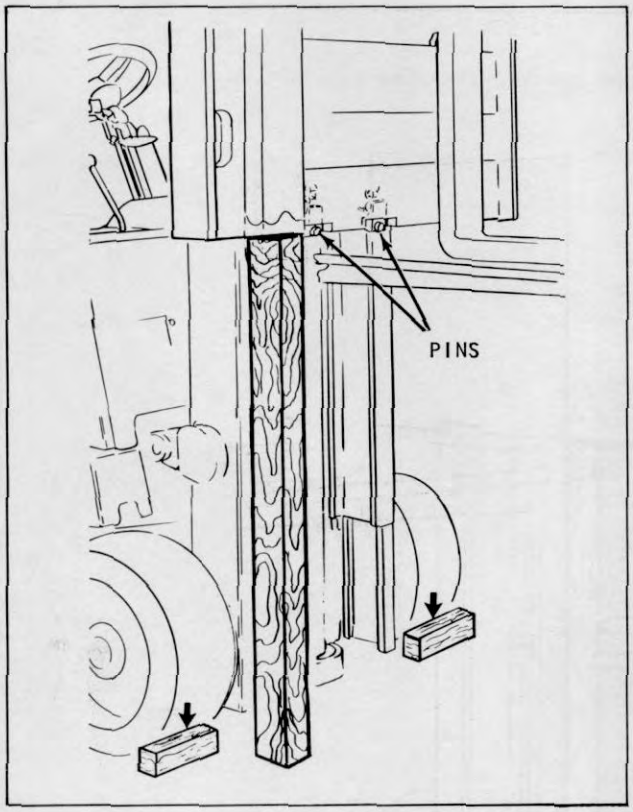

Plate 9593 Carriage Pin Replacement

Step 2. Remove anchor pins and replace with 3/8" x 2" bolts. FOR SAFETY REASONS, REMOVE ONLY ONE PIN AT A TIME. This will make pin removal easier when carriage is lowered.

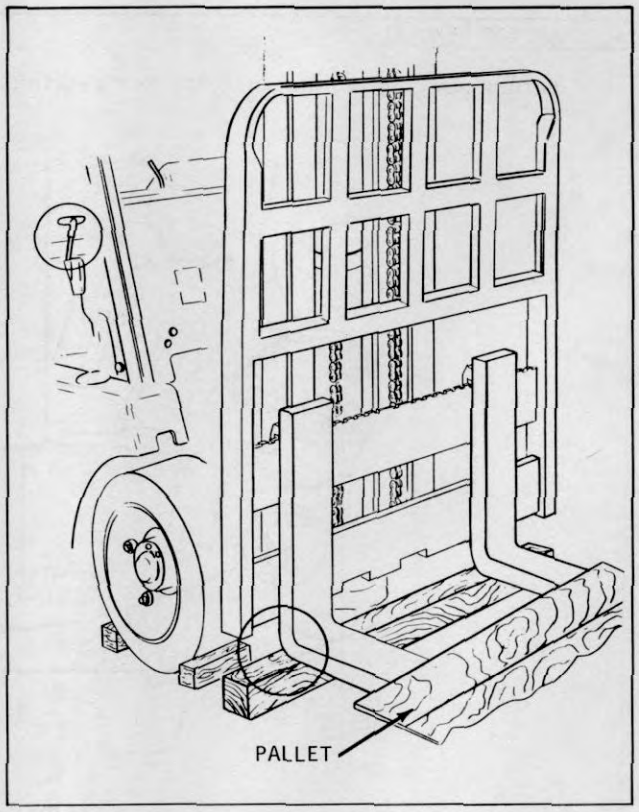

Plate 9560 Fork and Carriage Blocking

Step 3. Raise carriage off beam. Place beam on floor so, when lowered, the heal of the fork will rest on it as shown.

Step 4. Tilt upright full forward.

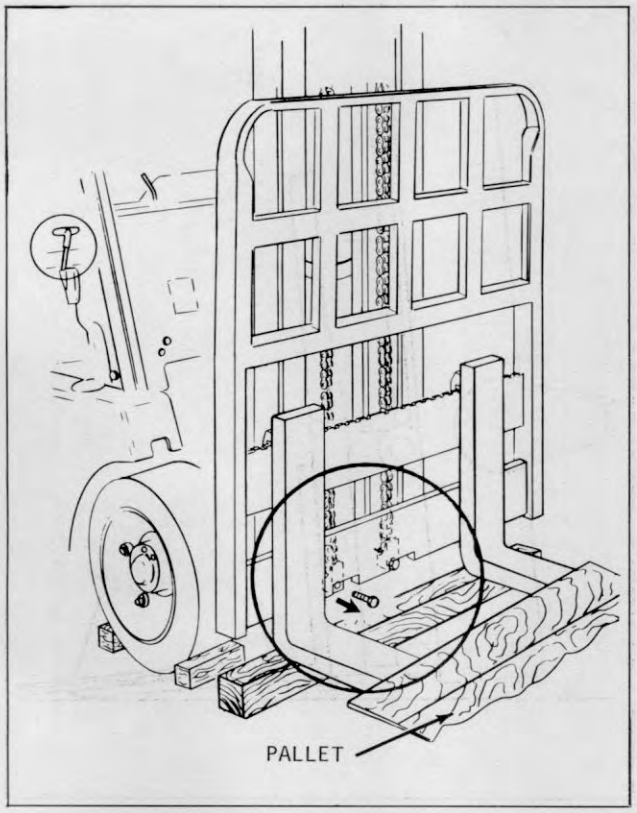

Plate 9561 Removing Bolts

Step 5. Remove 3/8" x 2" bolts. Place pallet on fork ends.

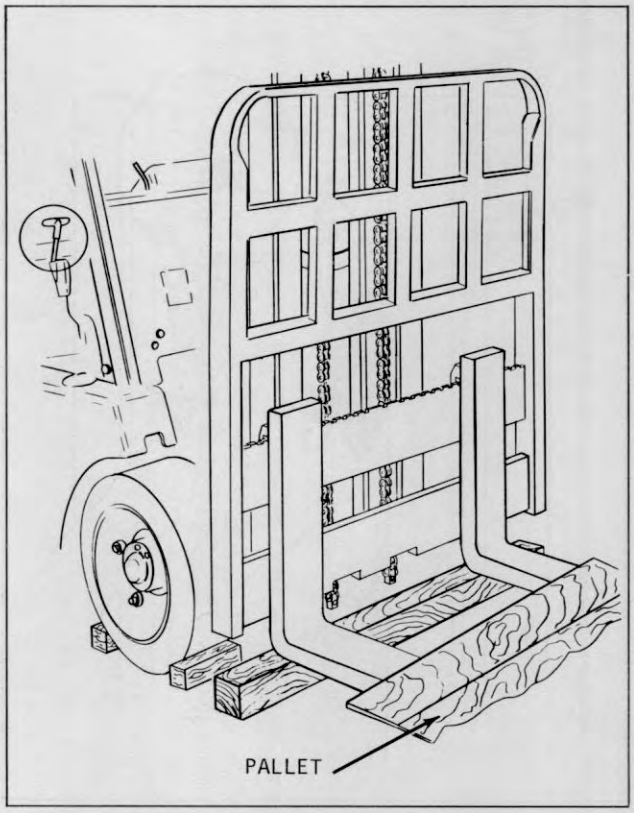

Plate 9562 Removing Chains From Anchors

Step 6. Pull chains out of carriage anchor brackets.

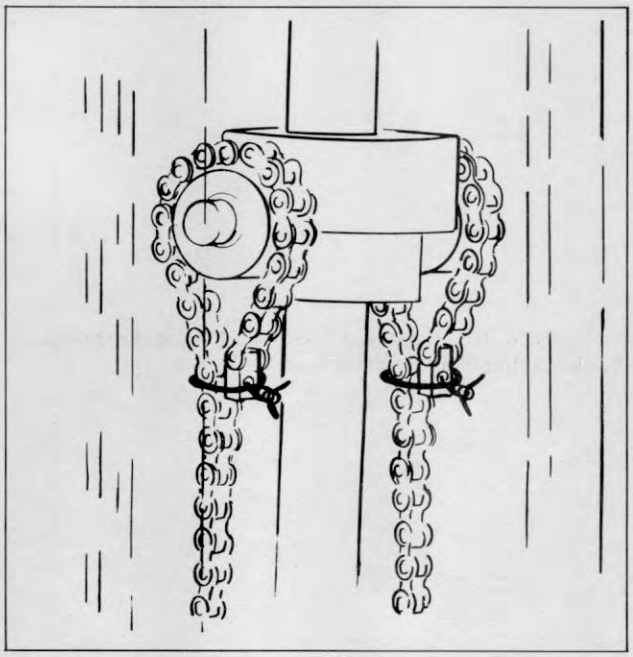

Plate 9563 Securing Chains (Typical)

Step 7. Wire chains around chain sheaves as shown

N O T E

Use the same method on all cylinders.

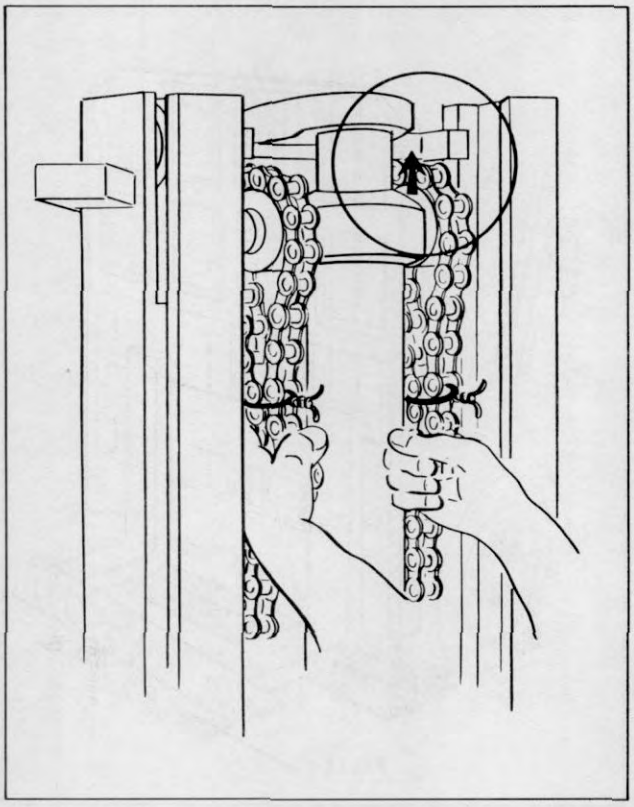

Plate 9564 Guiding Piston Head

Step 8. Guiding piston head with hands on chains raise piston to full up position.

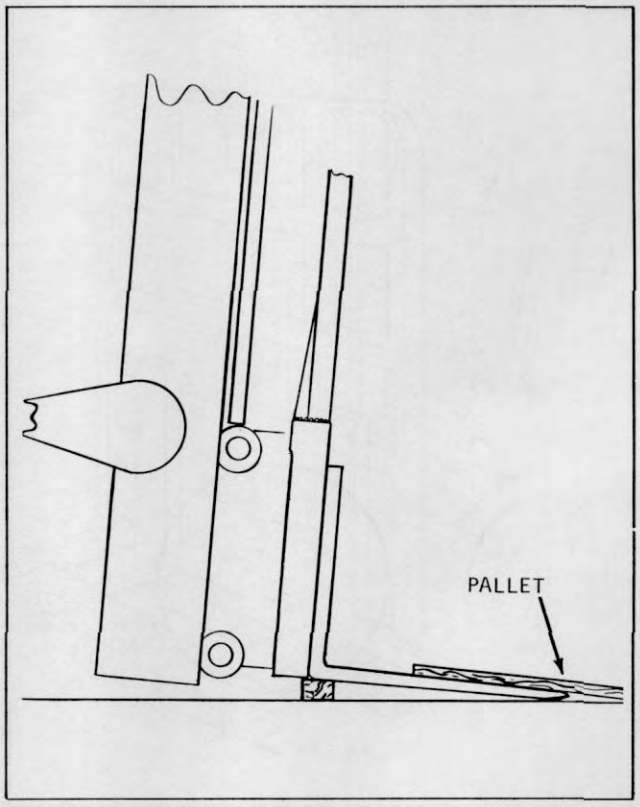

Plate 9565 Inner Rail Clearing Carriage Rollers

Step 9. Raise inner rail so it just clears upper carriage rollers. Leave upright at full forward tilt.

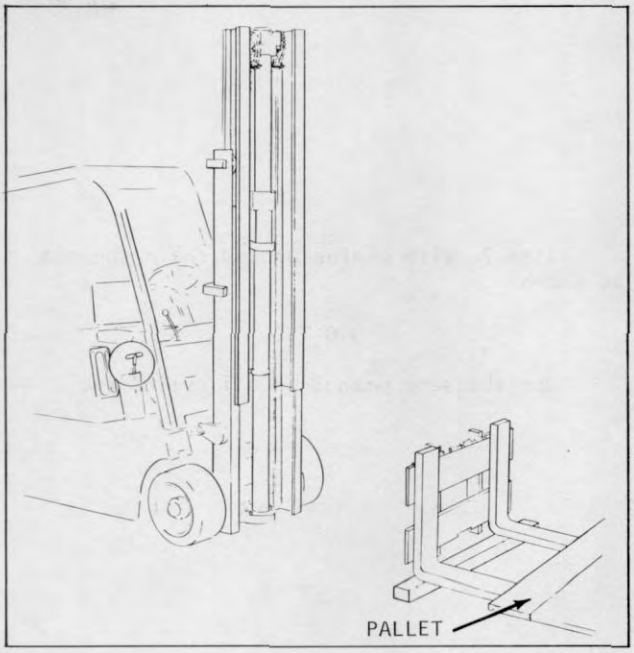

Plate 9566 Backing Machine Away From Carriage

Step 10. Remove blocks and release brake. Back machine away from carriage.

B. CARRIAGE ROLLER ADJUSTMENT

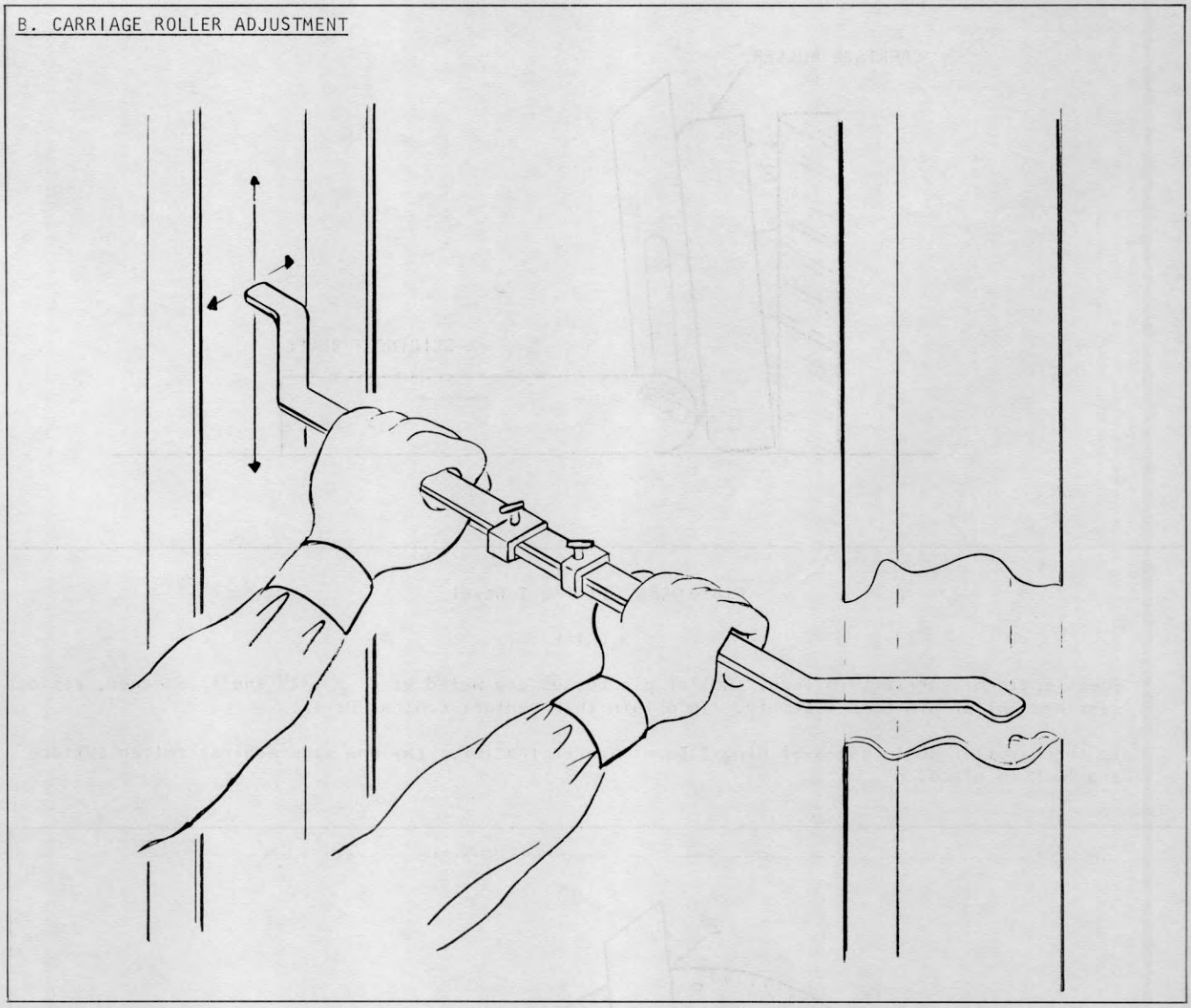

Plate 9567 Spanning Inner Rail

Step 1. Span inner rail with inside spanning tool to find the smallest distance between the rails. Lock tool in position.

N O T E

FOR SIX ROLLER CARRIAGE ONLY

After finding the smallest distance between rails, place a shim between the spanning tool and the inner rail, then lock spanning tool in position.

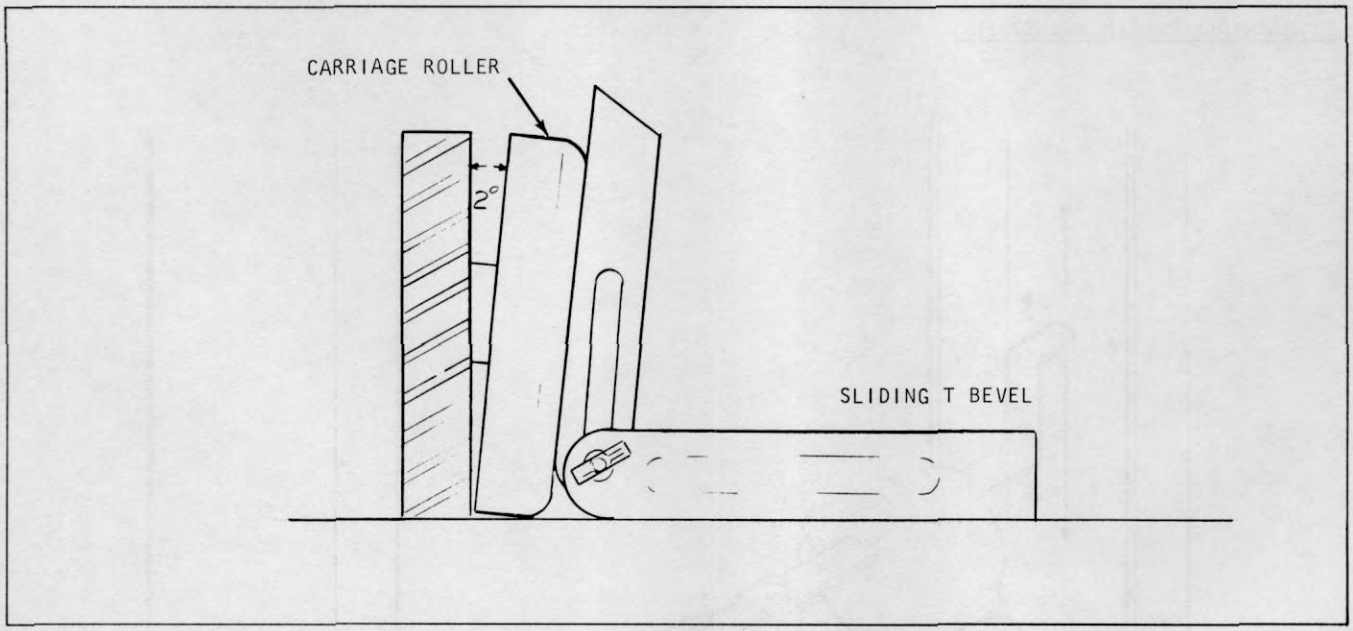

Plate 9589 Setting T Bevel

N O T E

Check angle of carriage rollers. Roller pin bosses are weled at $2^{o} \pm 1/2^{o}$ and if damaged, replace carriage roller pin boss assembly. To obtain this contact Central Parts.

To check roller angle use a Sliding T Bevel and Protractor. Lay one side against roller surface and lock in place.

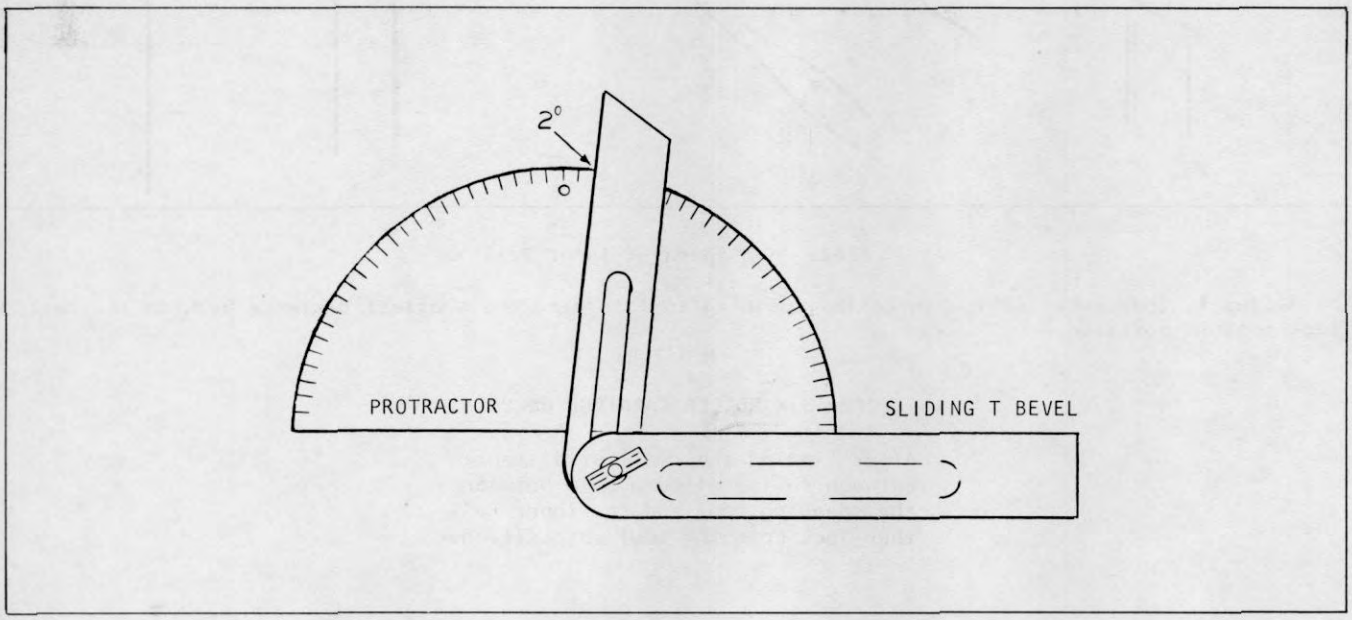

Plate 9590 Checking Roller Angle

Determine degree of angle by placing Protractor on Sliding T Bevel.

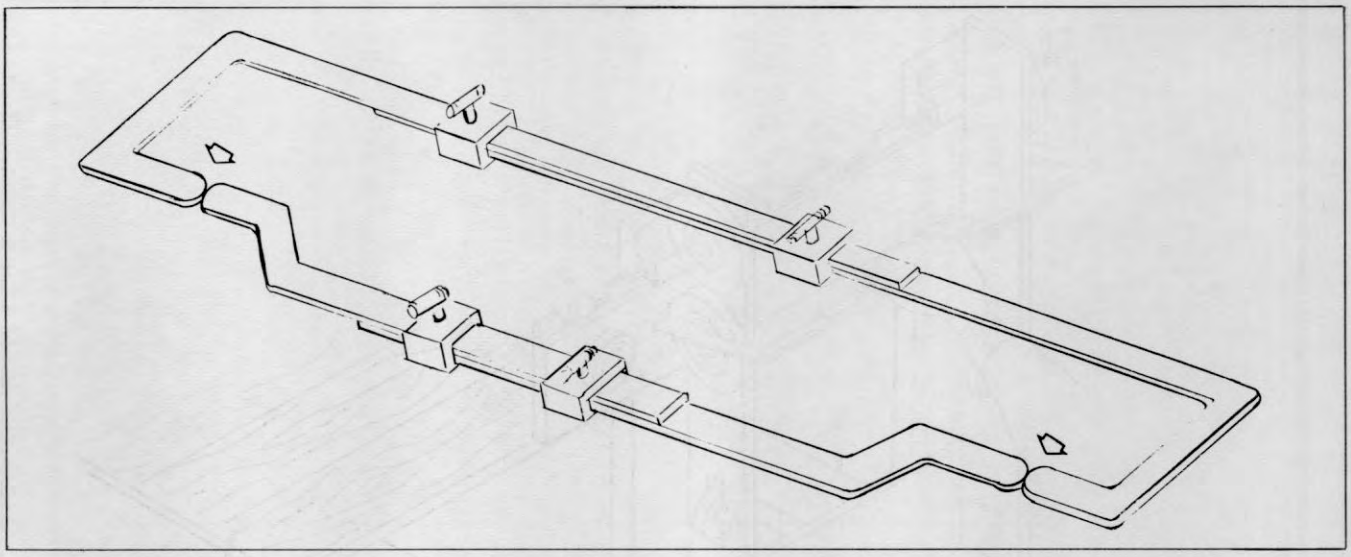

Plate 9568 Setting Outside Spanning Tool

Step 2. Set outside spanning tool to match inside spanning tool. Lock tool in position.

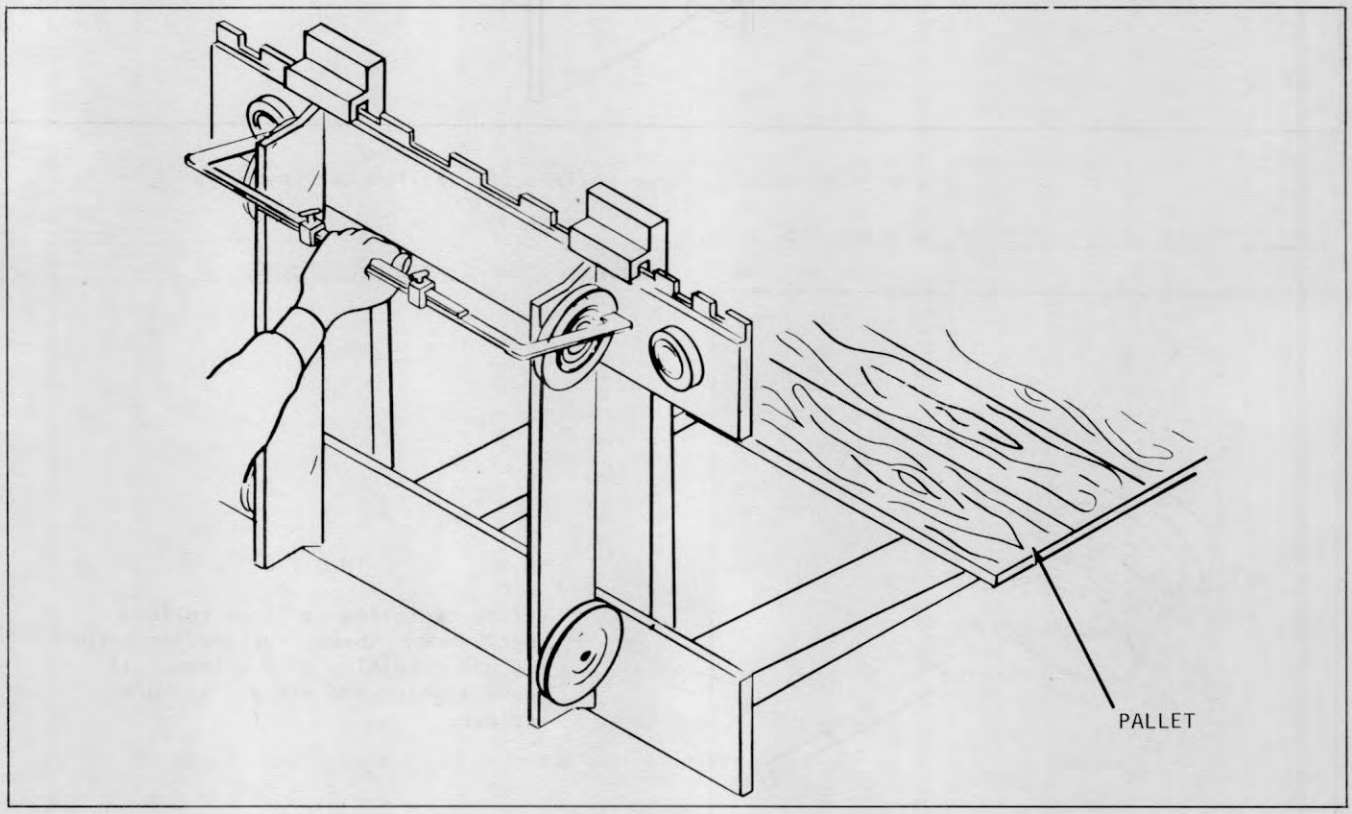

Plate 9569 Spanning Upper Rollers (Four Roller Carriage)

Step 3. Span upper carriage rollers at their outer most camber point. Add or subtract ...

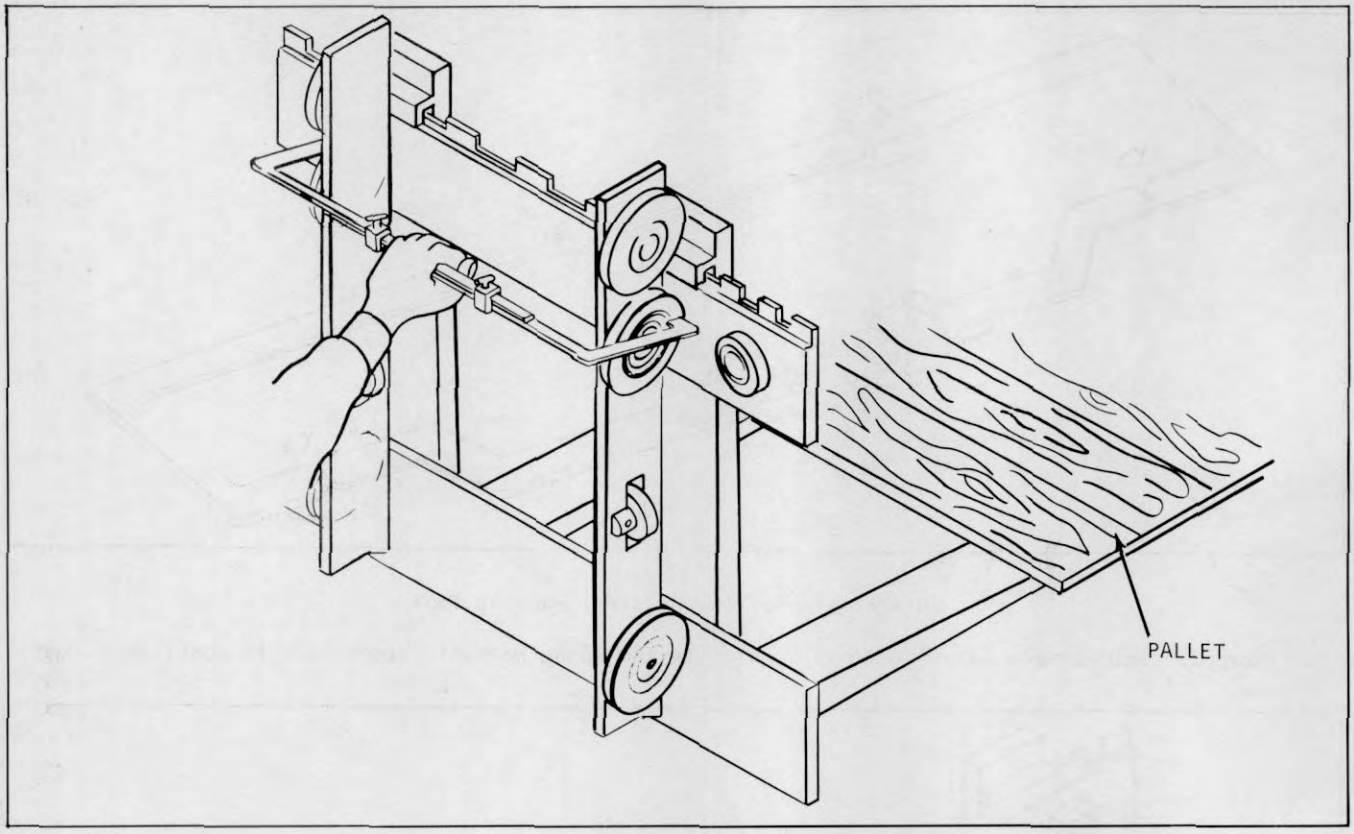

Plate 9570 Spanning Upper Rollers (Six Roller Carriage)

...shims at roller shaft to reach tool size.

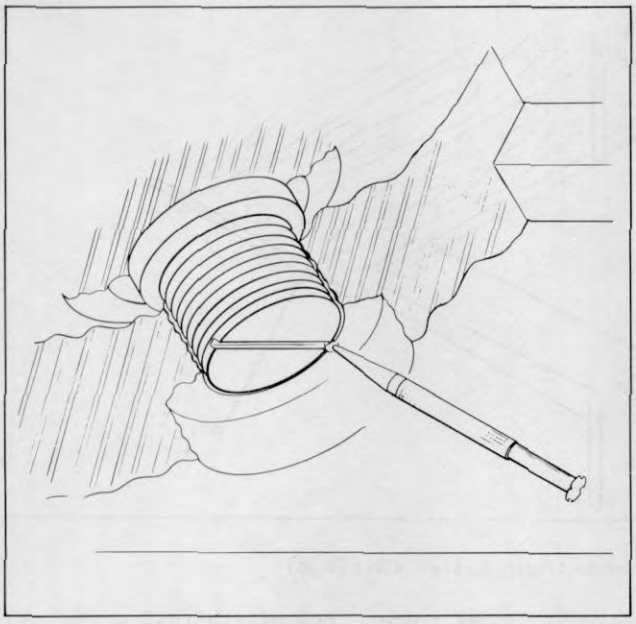

Plate 9571 Securing Outer Thrust Roller

N O T E

Before centering carriage rollers check outer thrust rollers for security and condition of bearings. If loose tighten and stake. If worn replace.

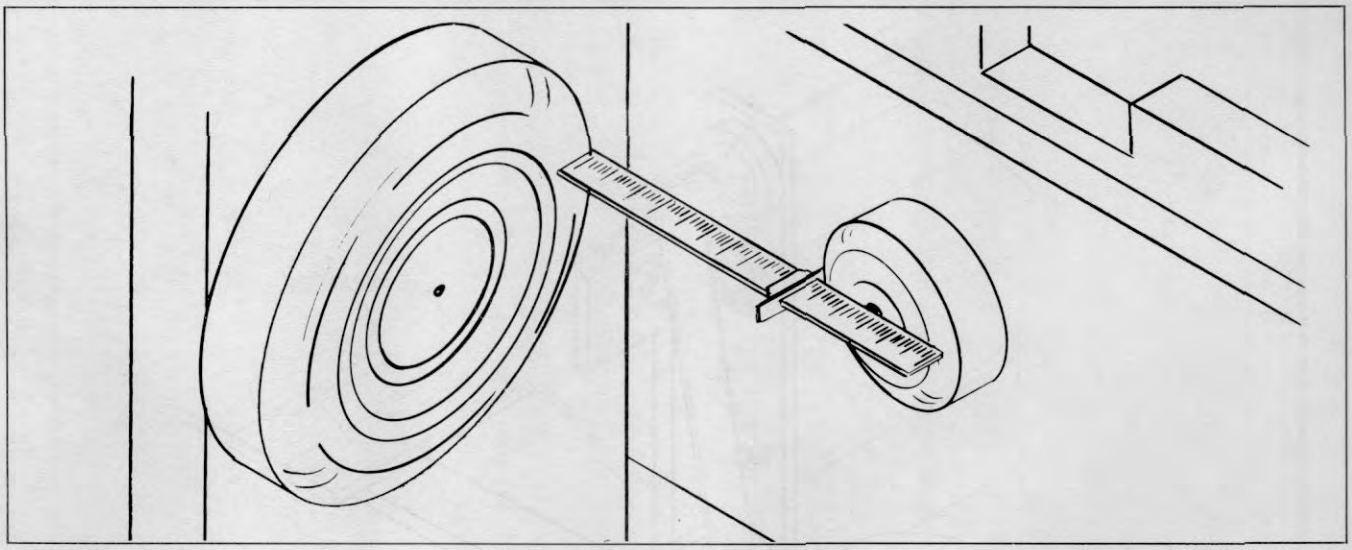

Plate 9572 Centering Carriage Rollers

Step 4. Center carriage rollers within outer thrust rollers by placing 6" scale on the carriage roller surface and measuring the distance to the outer thrust roller face. Add or subtract shims from one roller to the other to make measurement equal.

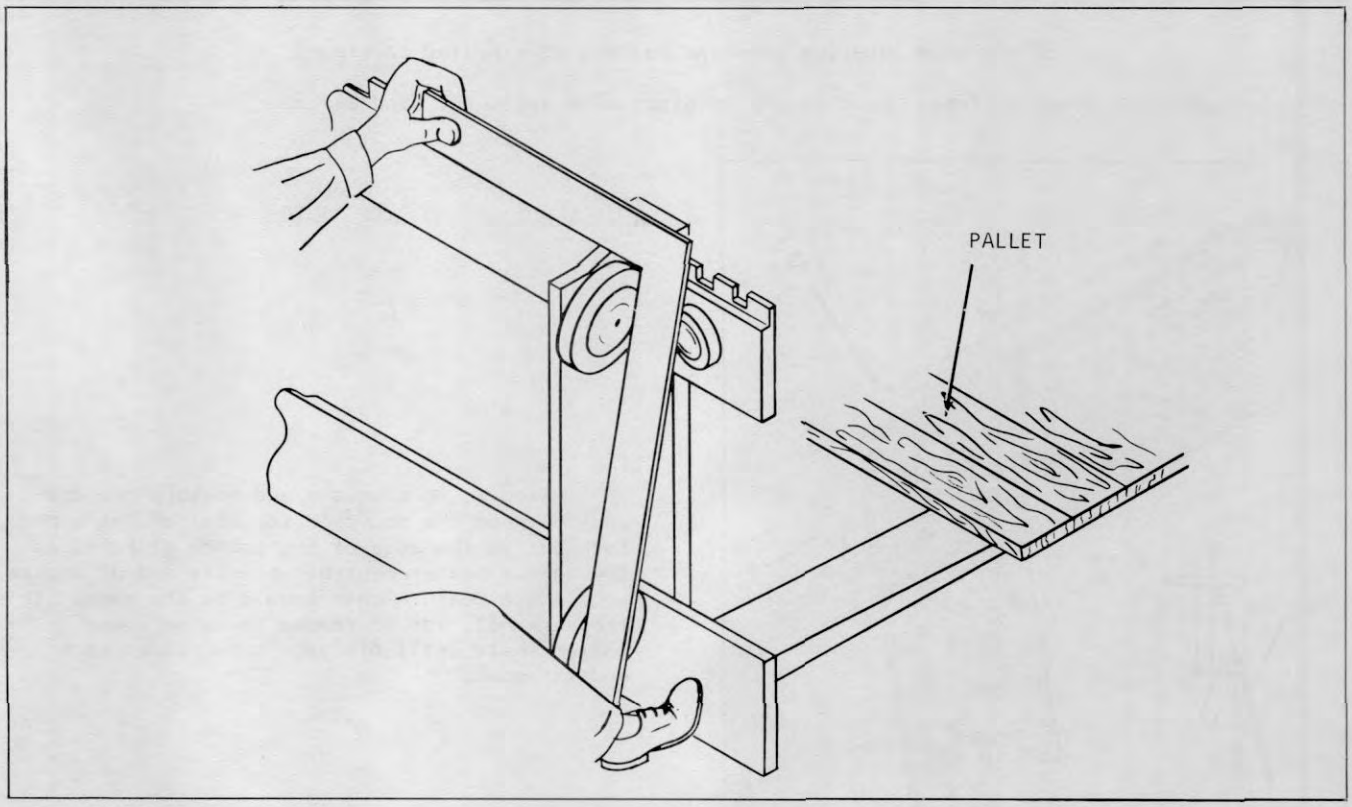

Plate 9573 Squaring Carriage Rollers (Four Roller Carriage)

Step 5. Square carriage rollers by placing carpenters square at the outer most camber of the ...

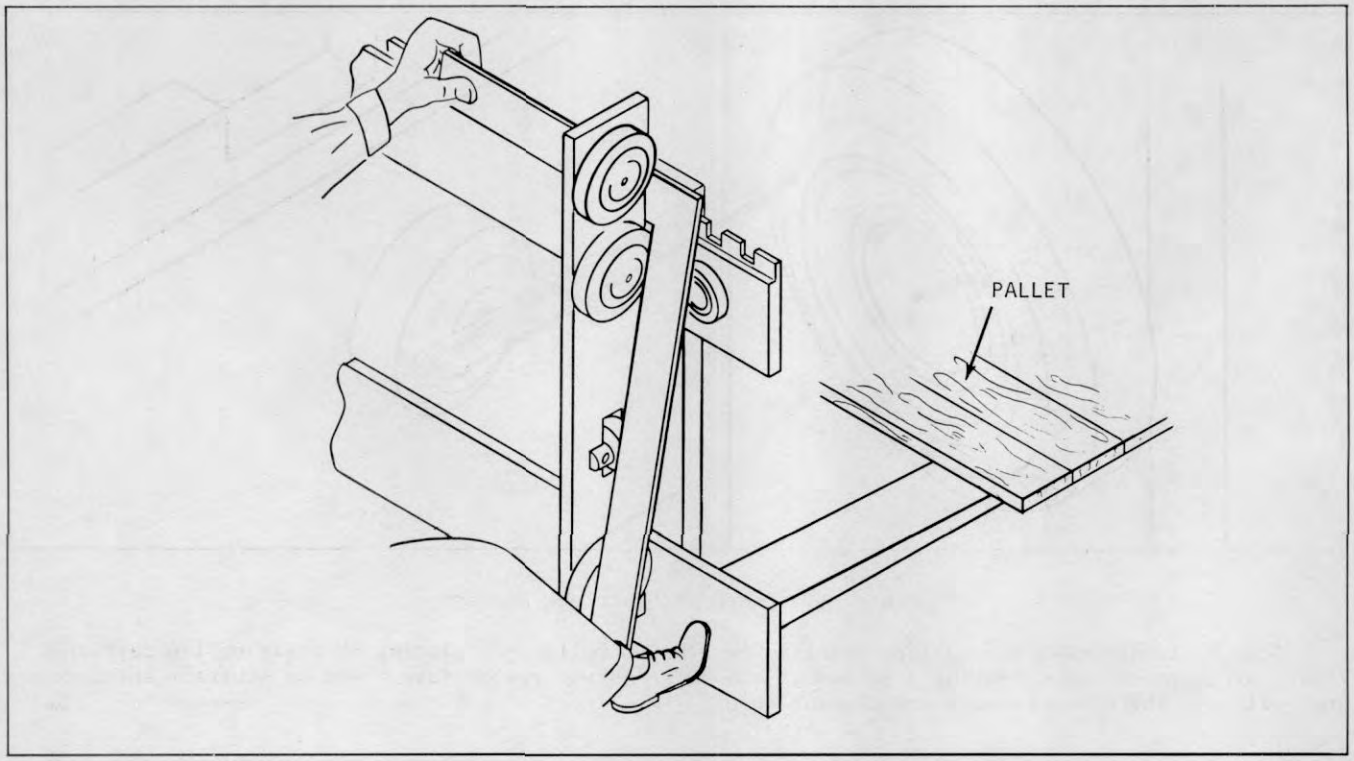

Plate 9574 Squaring Carriage Rollers (Six Roller Carriage)

... upper and lower rollers. Hold square in place with ankle and hand as shown.

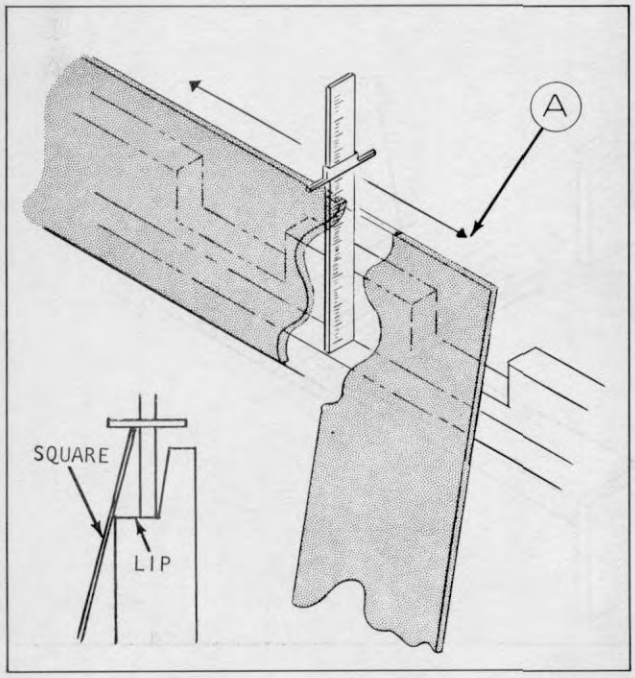

Plate 9575 Measuring For Squareness

Step 6. Hold square and measure the disance between the top face (or lip) of the upper fork bar to the edge of the square at Point A. Now take a measurement at opposite end of square .... these measurements should be the same. If they are not, add or remove shims on lower roller shaft until distance measured at each end is equal.

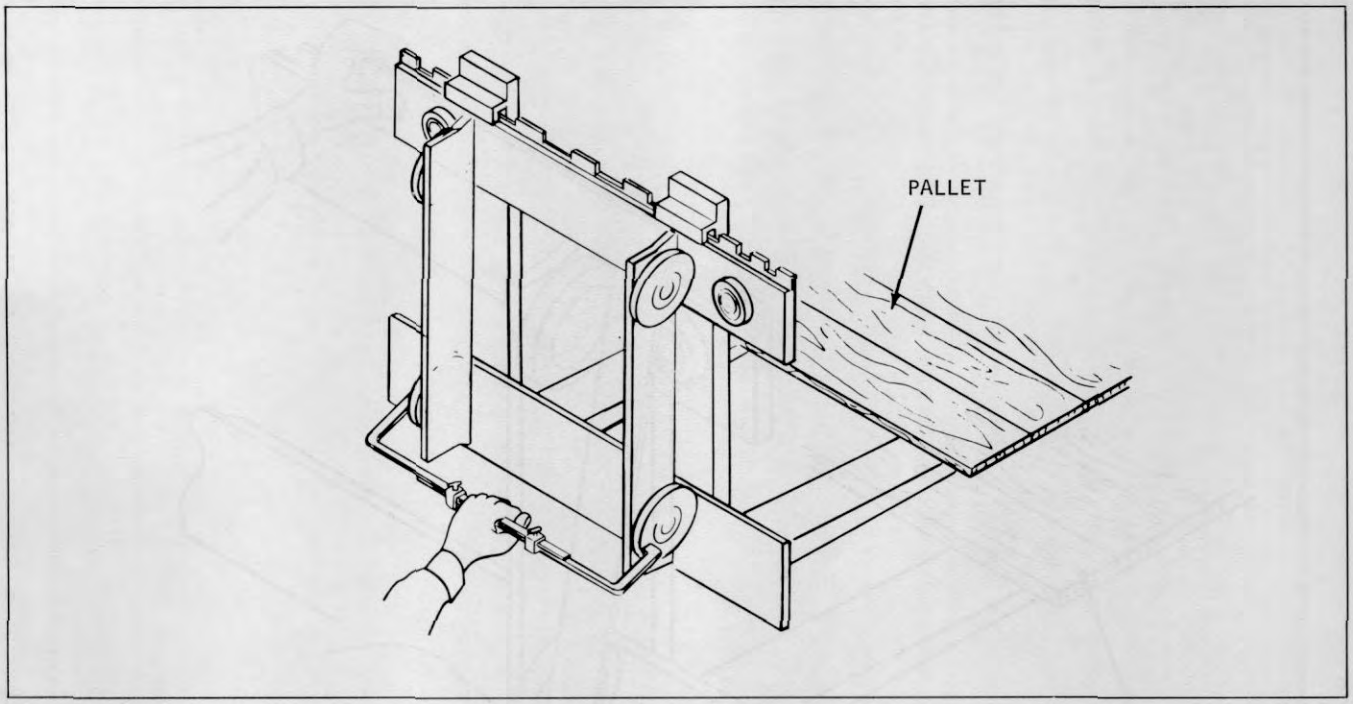

Plate 9576 Spanning Lower Rollers (Four Roller Carriage)

Step 7. Span lower rollers. Add or subtract shims to (the roller that has not been squared) ...

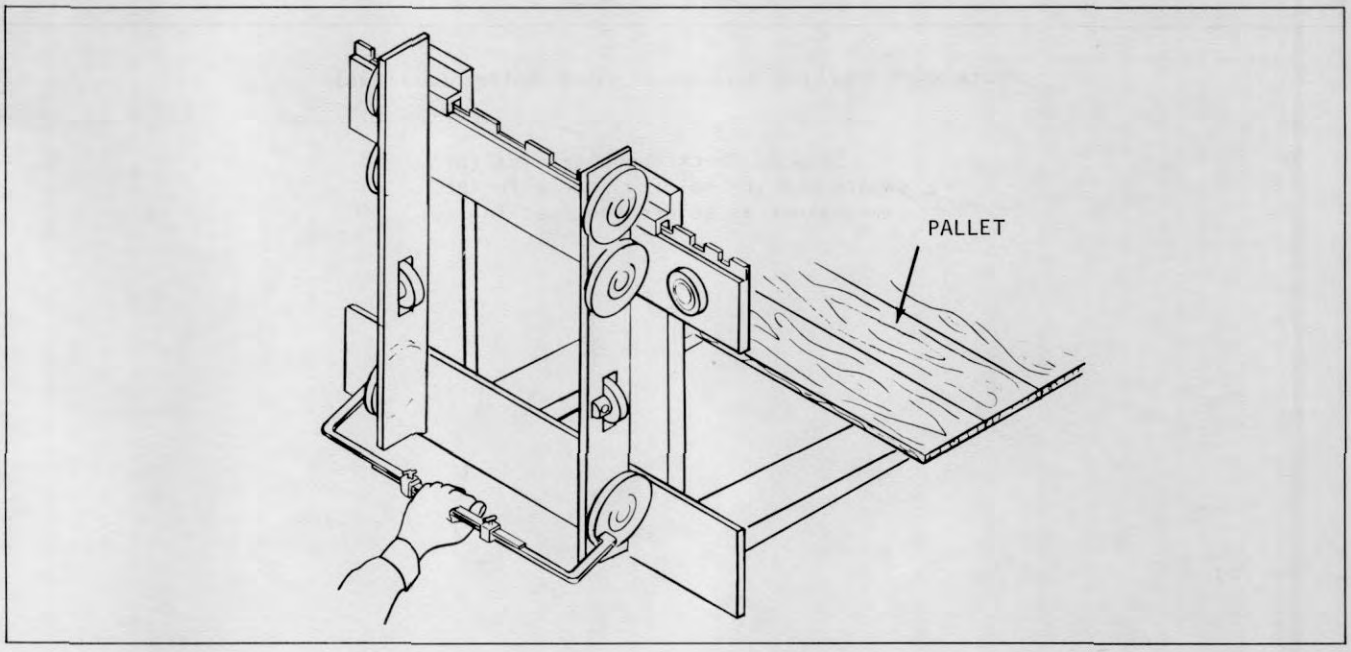

Plate 9577 Spanning Lower Rollers (Six Roller Carriage)

... reach the size of the outside spanning tool.

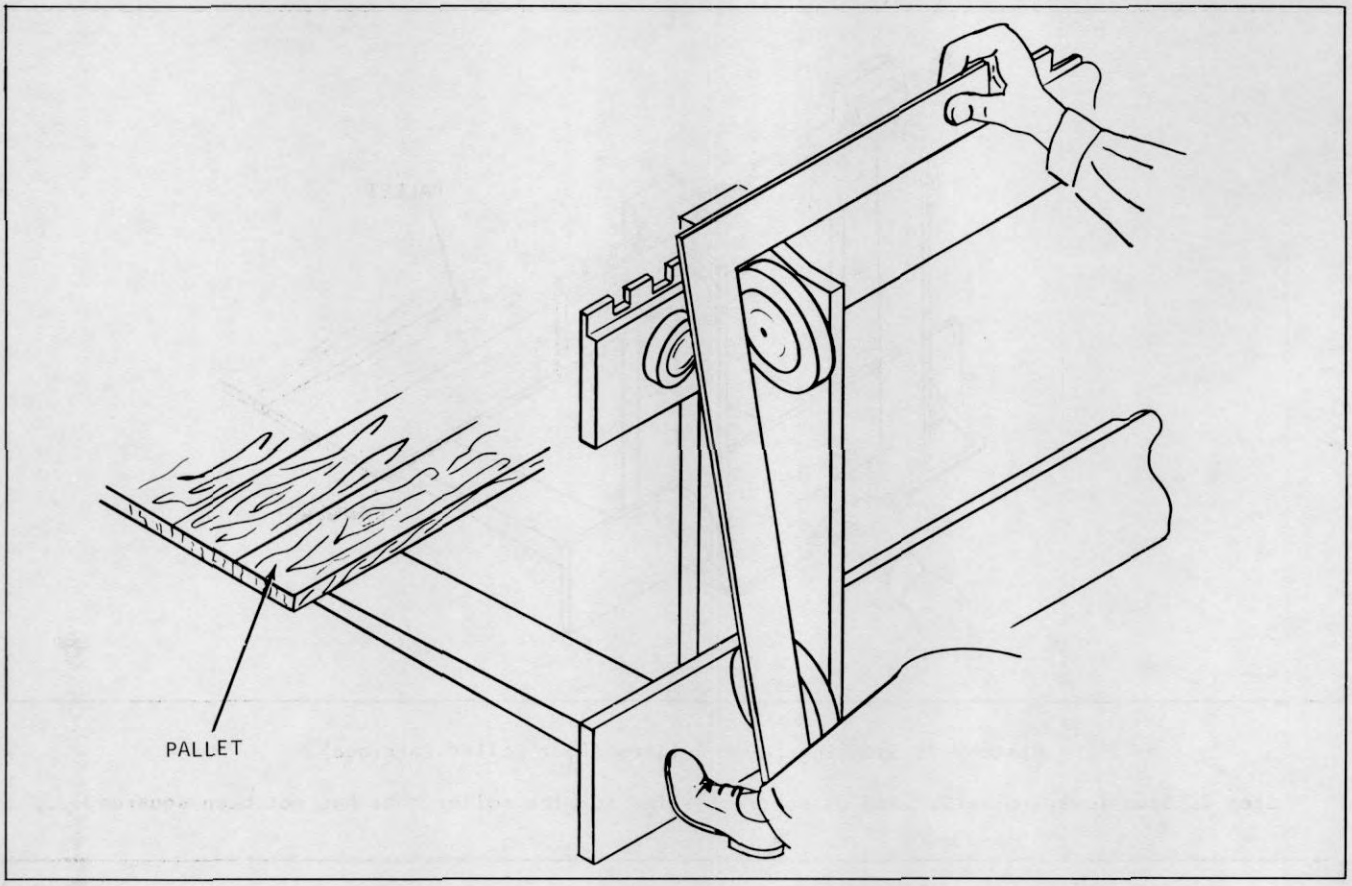

Plate 9578 Checking Squareness (Four Roller Carriage)

Step 8. Check opposite side for sauareness (by holding square in the same manner as before and checking ...

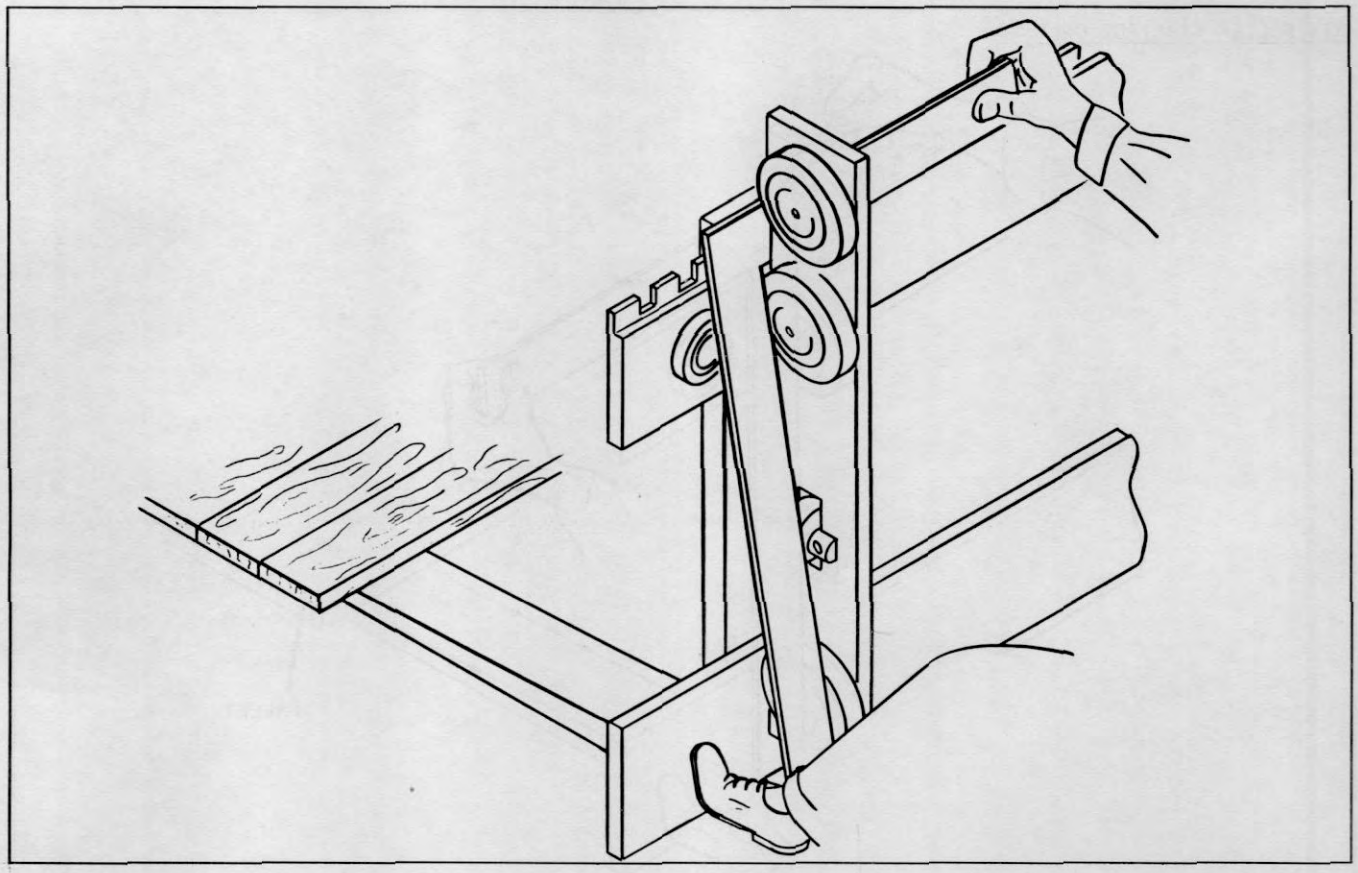

Plate 9579 Checking Squareness (Six Roller Carriage)

... measurement). This side will be square within 1/32"; if not, return to Step 5. and repeat procedure.

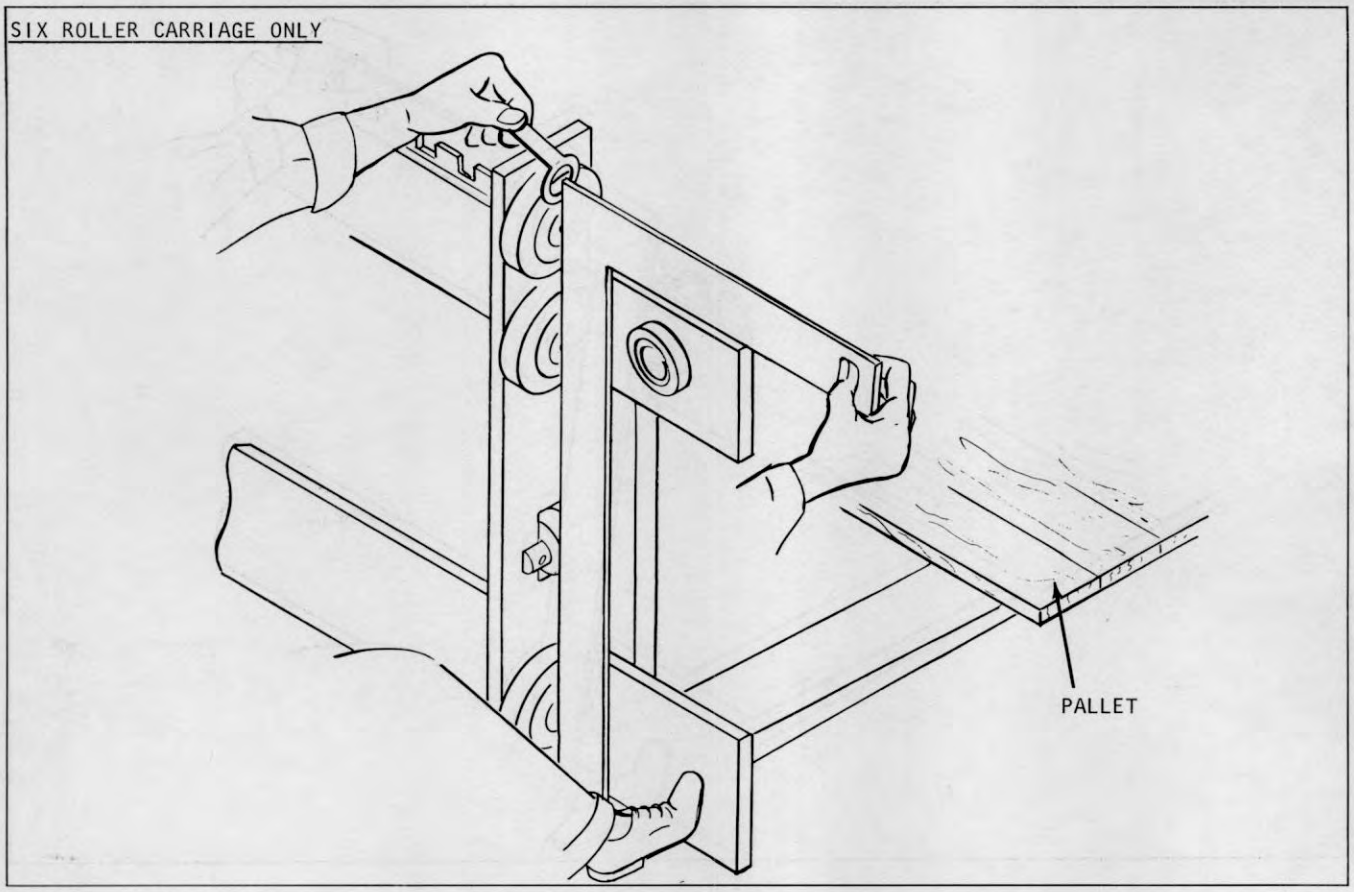

Plate 9580 Top Roller Clearance

Step 1. Place square on the vertical center line of the carriage rollers, as shown above. There must be some clearance between the square and the side surface of the top roller. This clearance should not exceed 1/32" or one shim

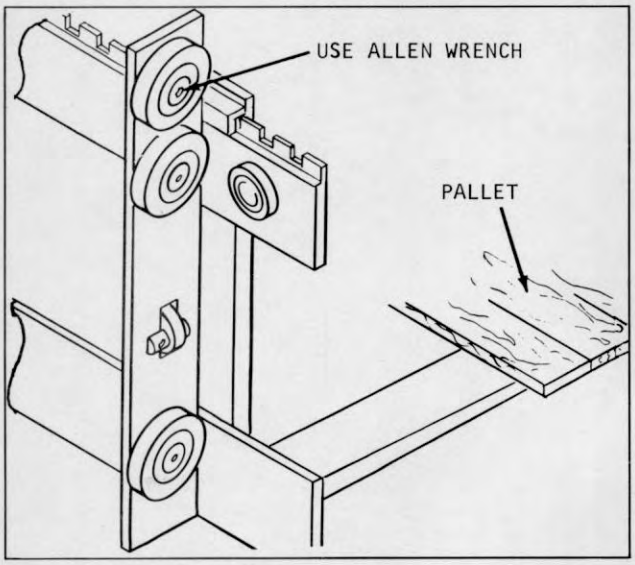

Plate 9581 Removing Top Roller

Step 2. If adjustment is necessary, remove allen screw, lock washer and flat washer to add or remove shims on shaft. Tighten screw securely after completing adjustment.

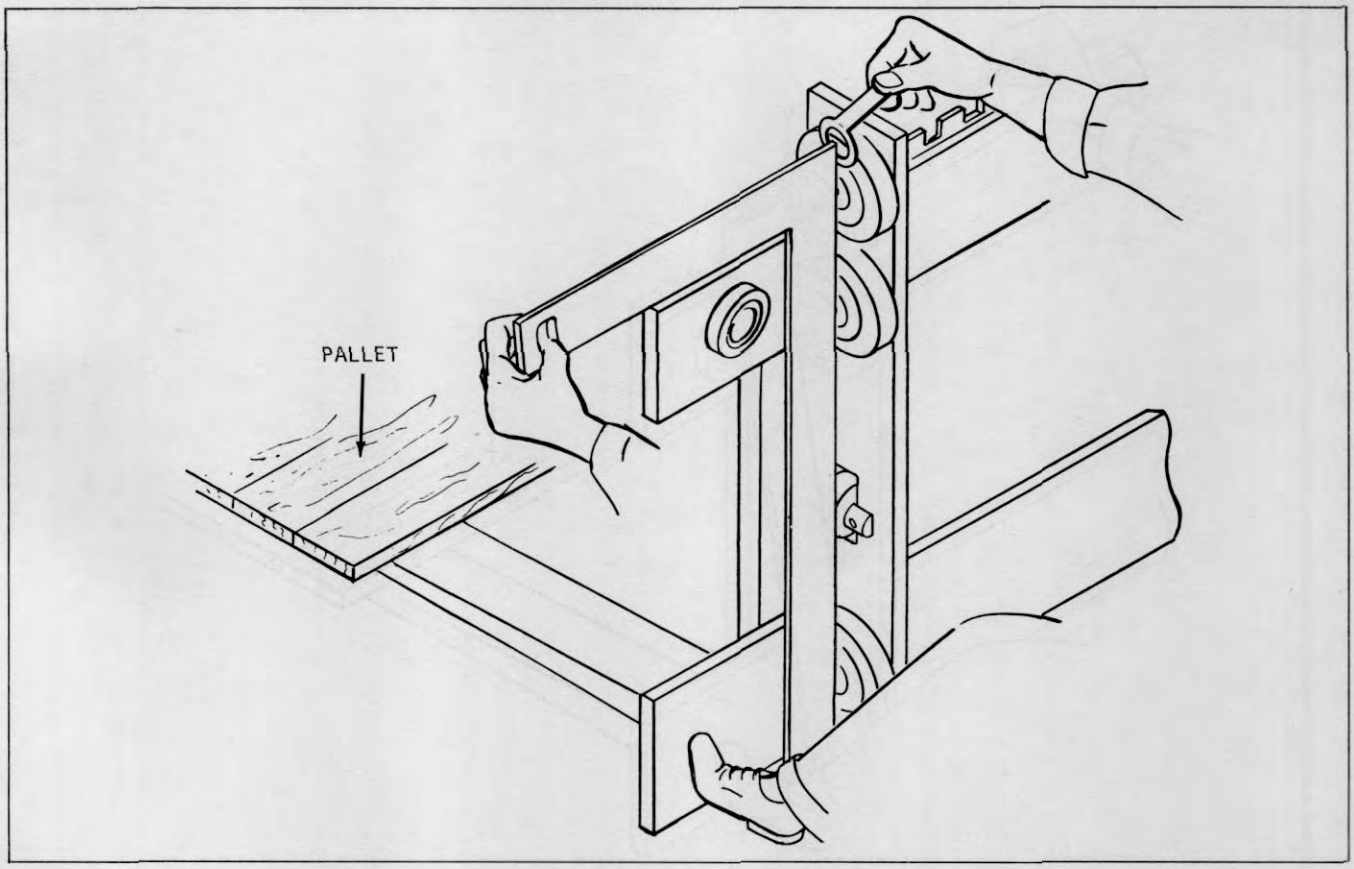

Plate 9582 Top Roller Clearance

Step 3. Check opposite upper roller in the same manner; adjust if necessary.

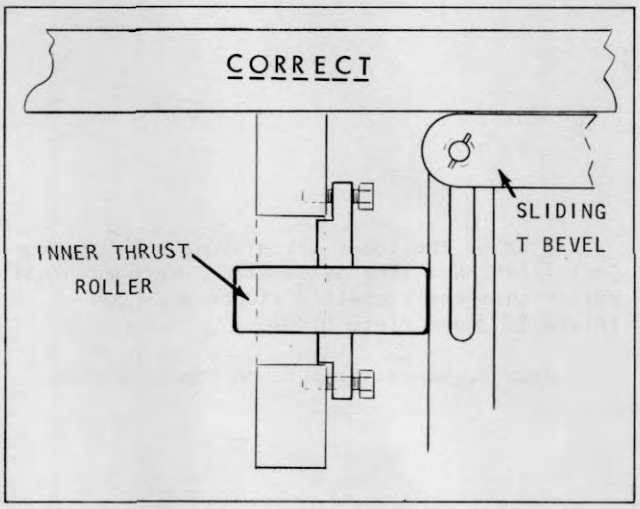

Plate 9583 Checking Squareness■CORRECT

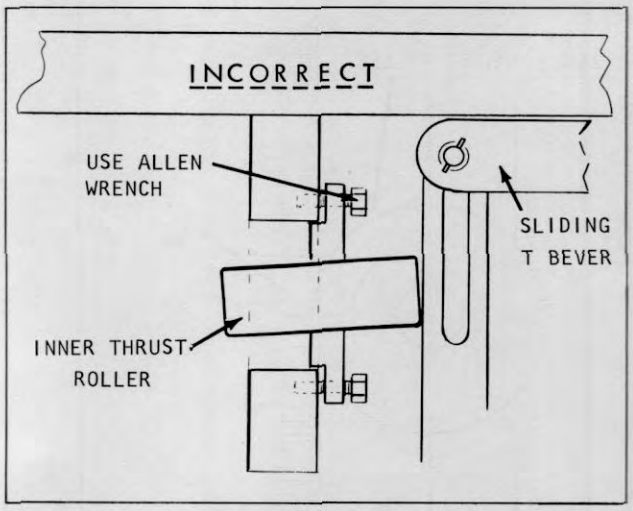

Plate 9584 Checking Squareness■INCORRECT

Step 4. Check squareness of inner thrust rollers with Sliding T Bevel. Set Sliding T Bevel to 90° using carpenters square.

Step 5. Add or subtract shims for adjustment (Use allen wrench see Plate 9584).

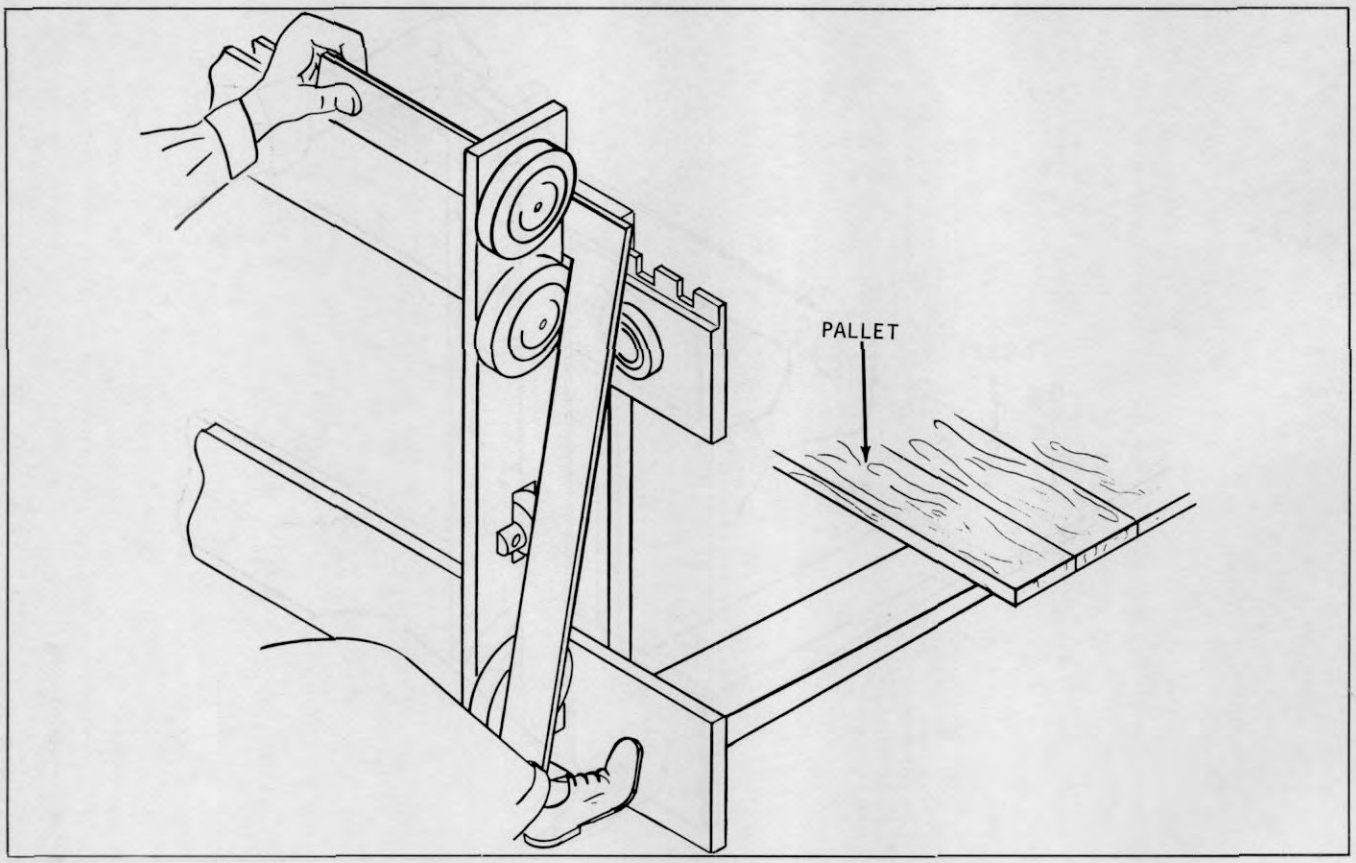

Plate 9574 Square And Side Thrust Roller

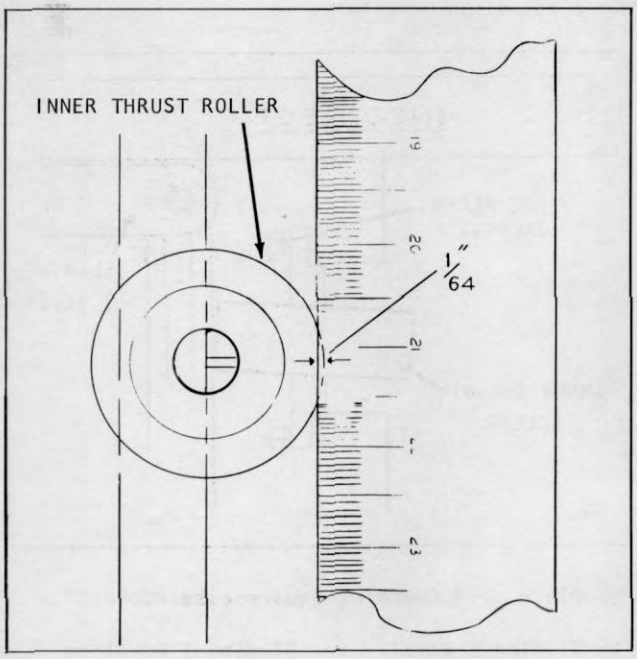

Plate 9585 Reading Roller Projection

Step 6. The inner thrust roller is to project 1/64" past line of square. Use one thrust roller shim and eyeball distance as shown (Plate 9573 and Plate 9585).

Step 7. Repeat Step 6. on opposite side.

C. CARRIAGE INSTALLATION

N O T E

Before installing carriage, check upright for proper shimming adjustment.

Step 1. Drive machine up to carriage and position upright to match tilt of carriage.

Step 2. Raise inner rails to just clear upper carriage rollers.

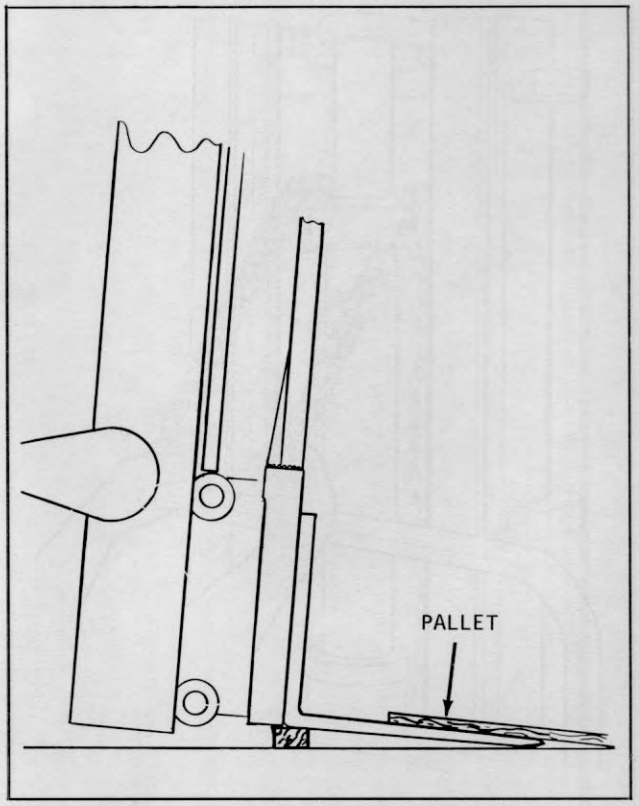

Plate 9565 Inner Rail Clearing Carriage Rollers

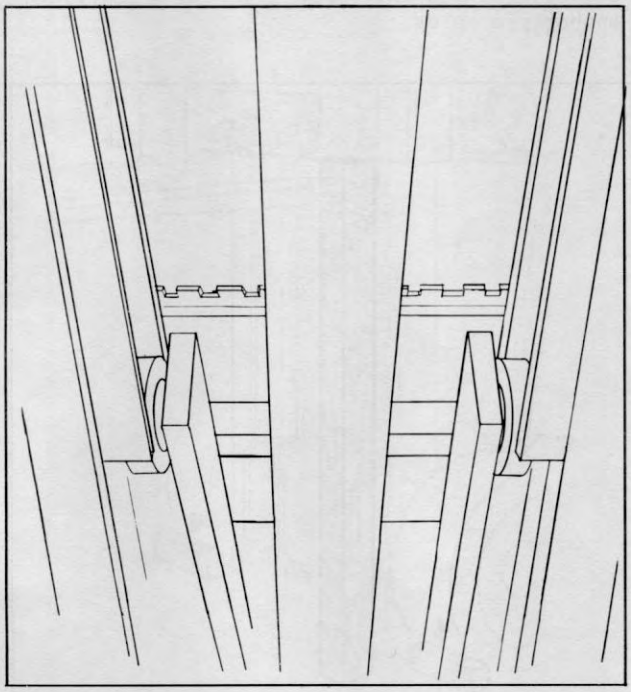

Plate 9591 Rollers Guiding Into Inner Rail

Step 3. Continue to drive macnine forward until inner rails line up with upper carriage rollers, then.... slowly lower inner rails to full down position.

C A U T I O N

CHECK TO BE SURE THE TOP CARRIAGE ROLLERS ARE GUIDING INTO INNER RAIL.

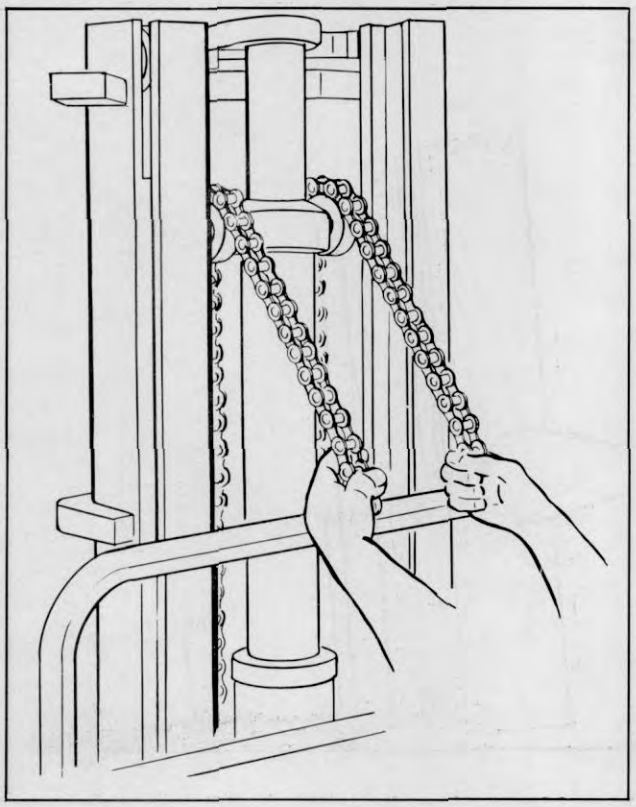

Plate 9586 Pulling Piston Head Down

Step 3(a). Remove wires holding lift chains.

(b). With a chain in each hand and someone holding the lift cylinder lever down, pull the piston to full down position. Place chains behind carriage.

Step 5. Raise carriage about 5' and place a 3' to 4' long 4"x4" wooden beam under it. DO NOT stand directly under forks. Lower carriage onto beam.

Step 6. Replace bolts with anchor pins.

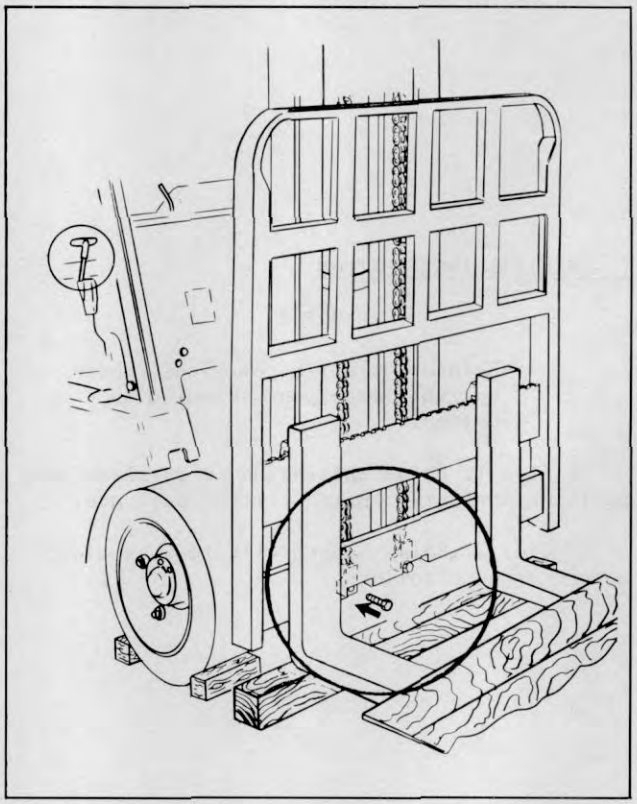

Plate 9587 Installing Bolts

Step 4. Put chain anchors in carriage anchor brackets and install 3/8" x 2" bolts in anchor pin holes.

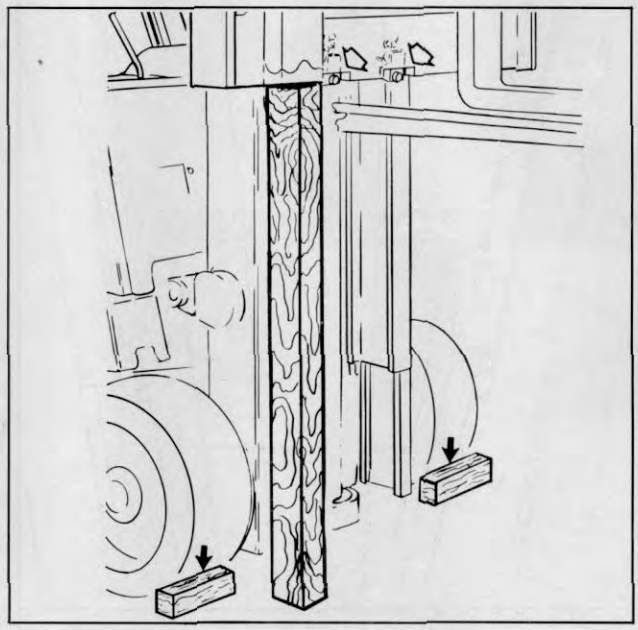

Plate 9593 Carriage Pin Replacement

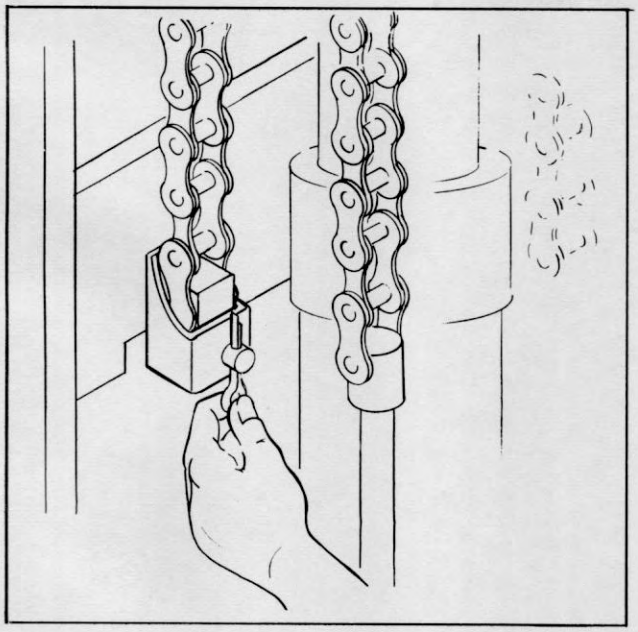

Plate 9588 Installing Cotter Pins

Step 7. Replace cotter pins in anchor pins.

Step 8. Raise and lower carriage to full positions checking all phases of operation.

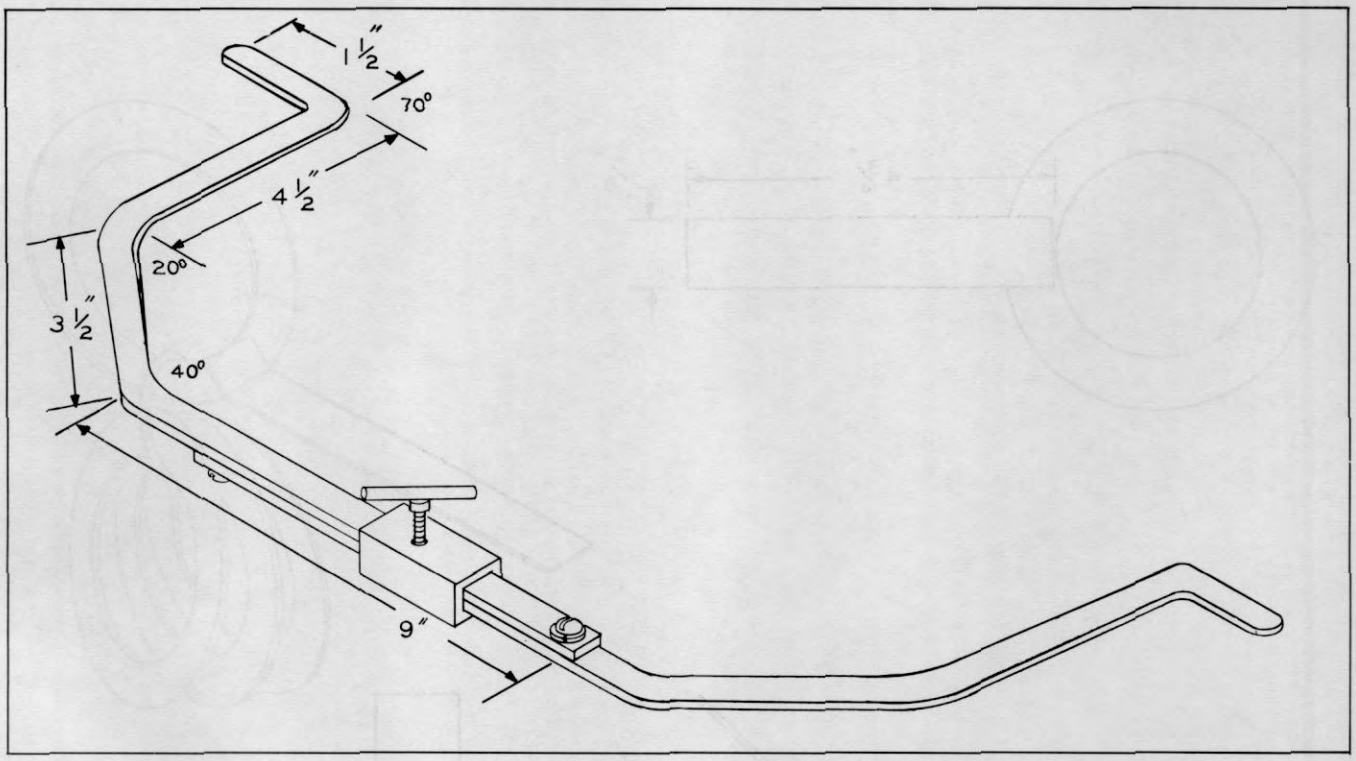

INSIDE SPANNING TOOL

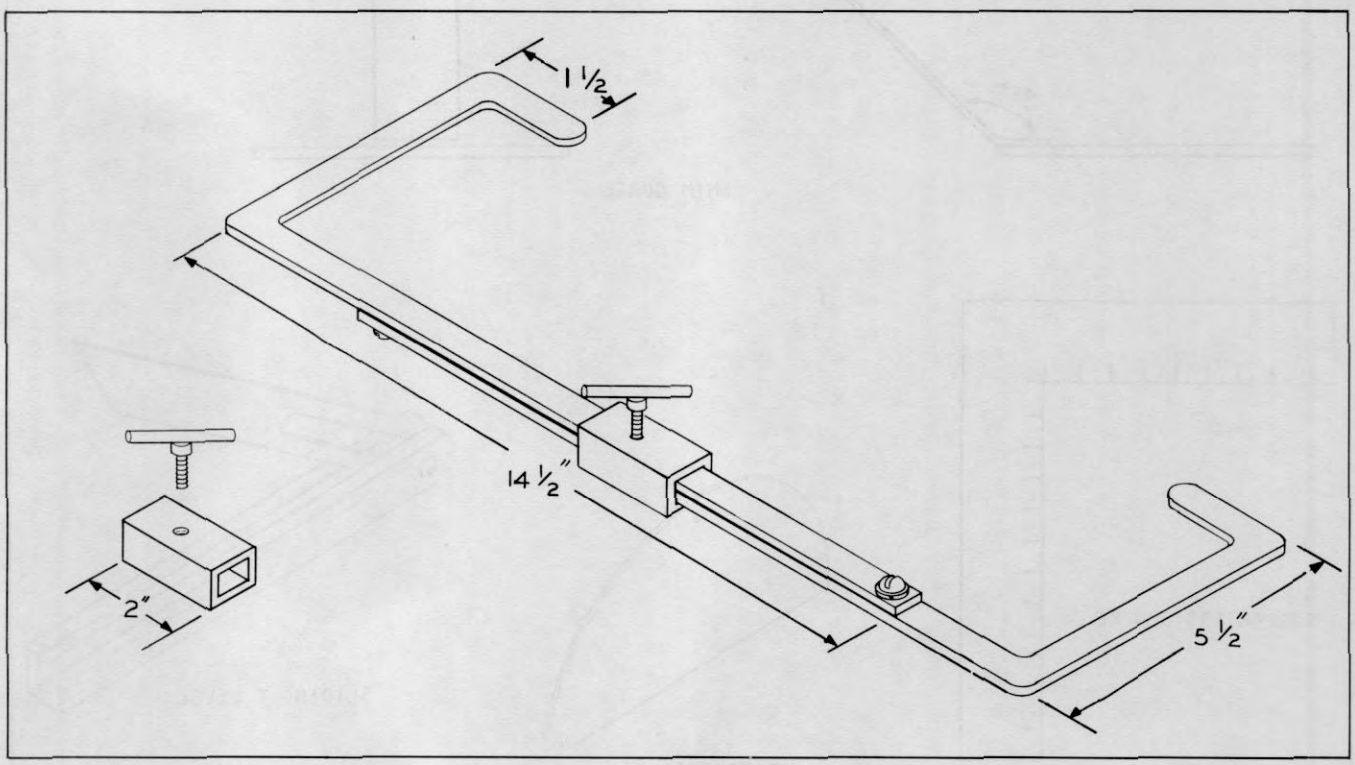

OUTSIDE SPANNING TOOL

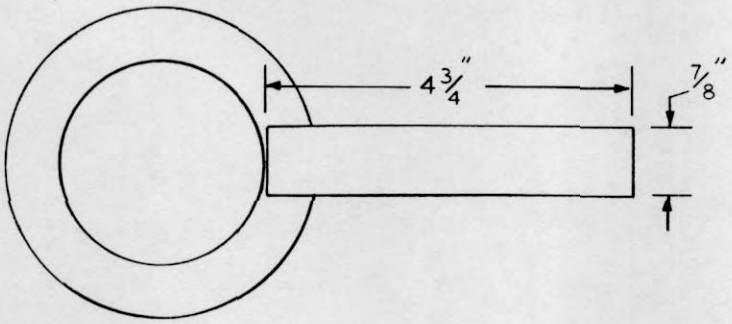

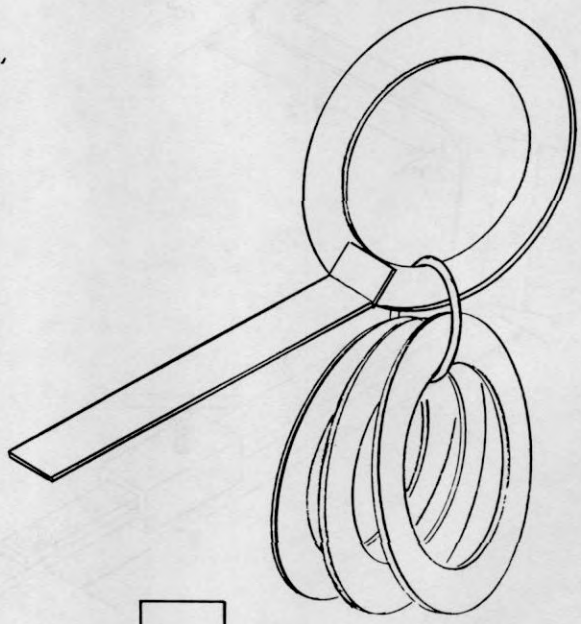

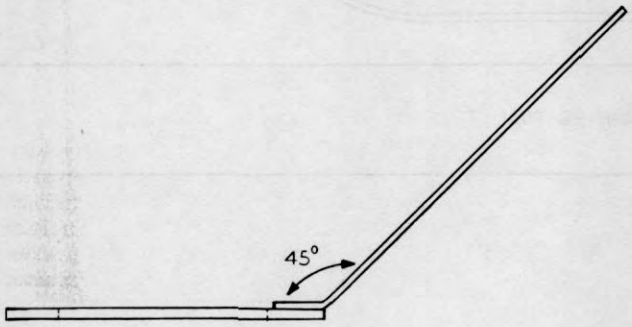

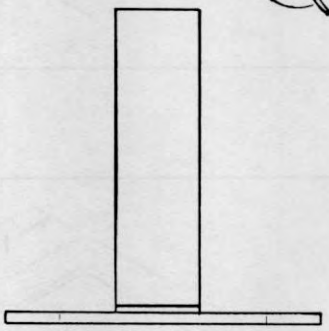

SHIM GUAGE

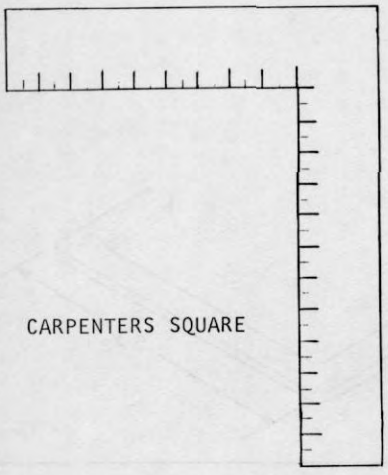

CARPENTERS SQUARE

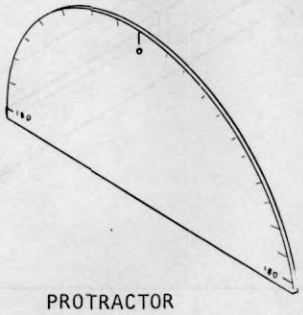

PROTRACTOR

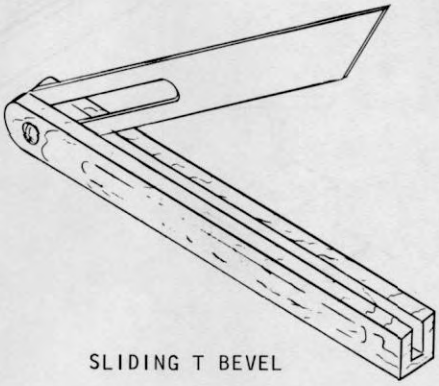

SLIDING T BEVEL

UPRIGHT ROLLER ADJUSTMENT -- STANDARD AND HILO

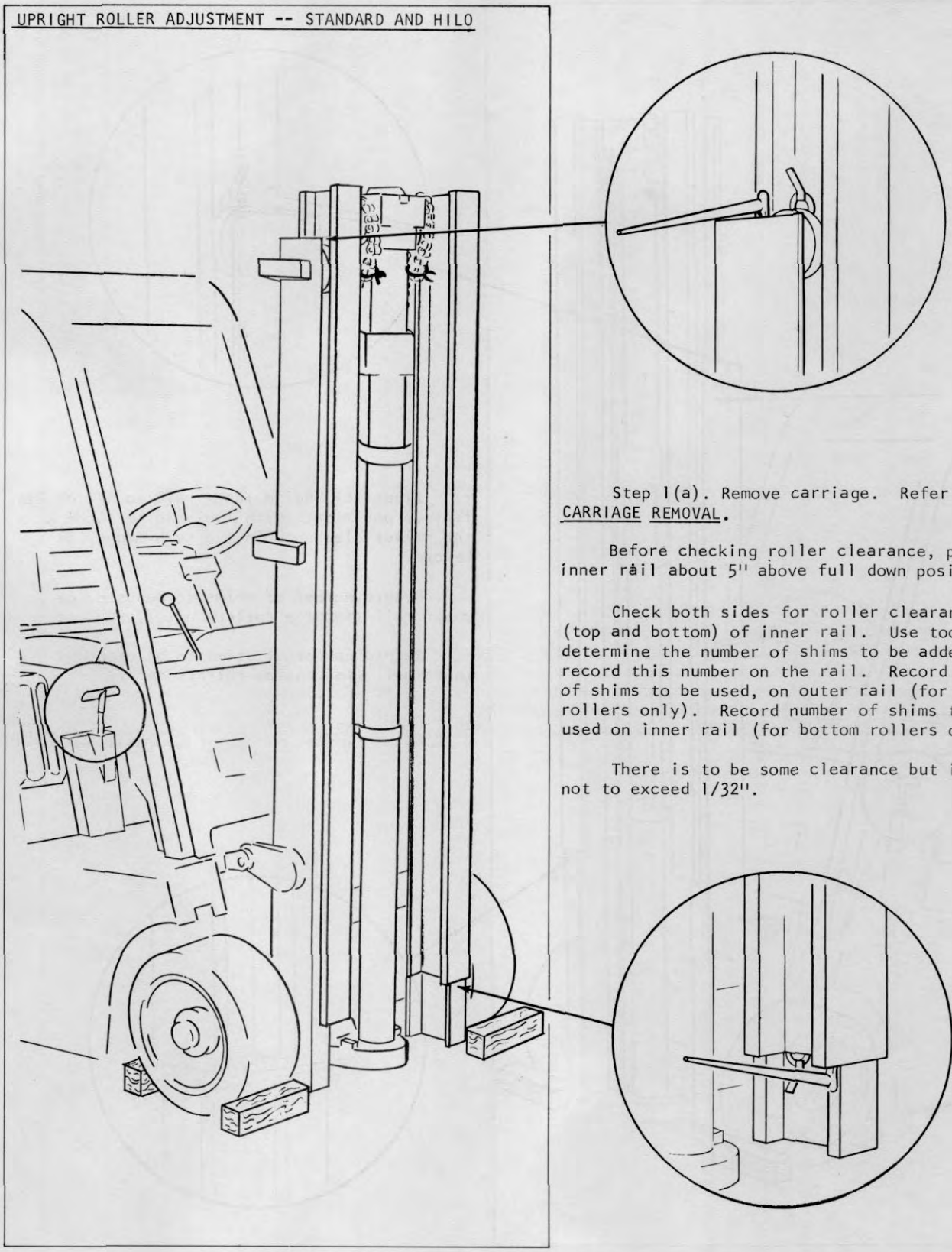

Step 1(a). Remove carriage. Refer to CARRIAGE REMOVAL.

Before checking roller clearance, position inner rail about 5" above full down position.

Check both sides for roller clearance at (top and bottom) of inner rail. Use tool to determine the number of shims to be added and record this number on the rail. Record number of shims to be used, on outer rail (for top rollers only). Record number of shims to be used on inner rail (for bottom rollers only).

There is to be some clearance but it is not to exceed 1/32".

Plate 9624

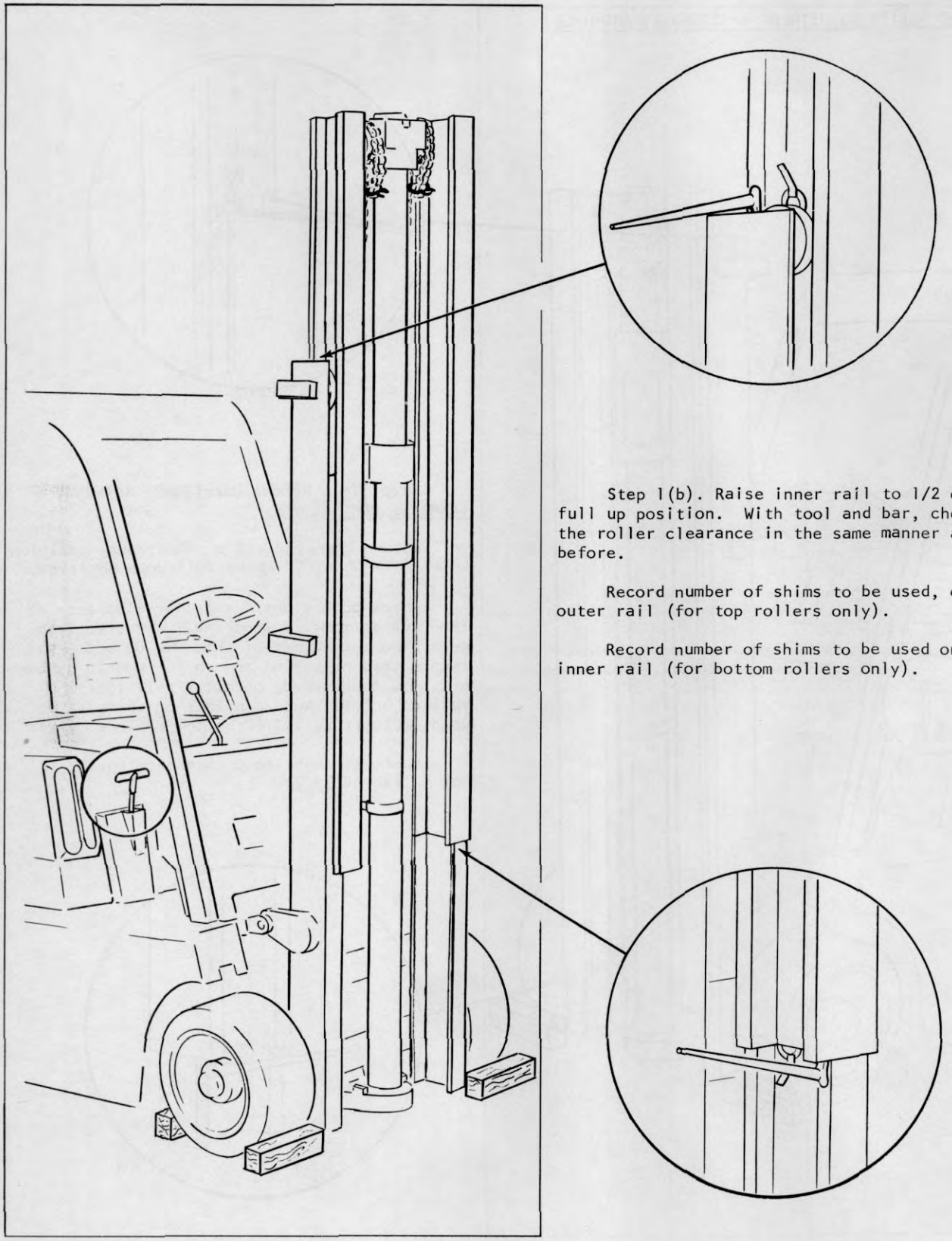

Step 1(b). Raise inner rail to 1/2 of its full up position. With tool and bar, check the roller clearance in the same manner as before.

Record number of shims to be used, on outer rail (for top rollers only).

Record number of shims to be used on inner rail (for bottom rollers only).

Plate 9625

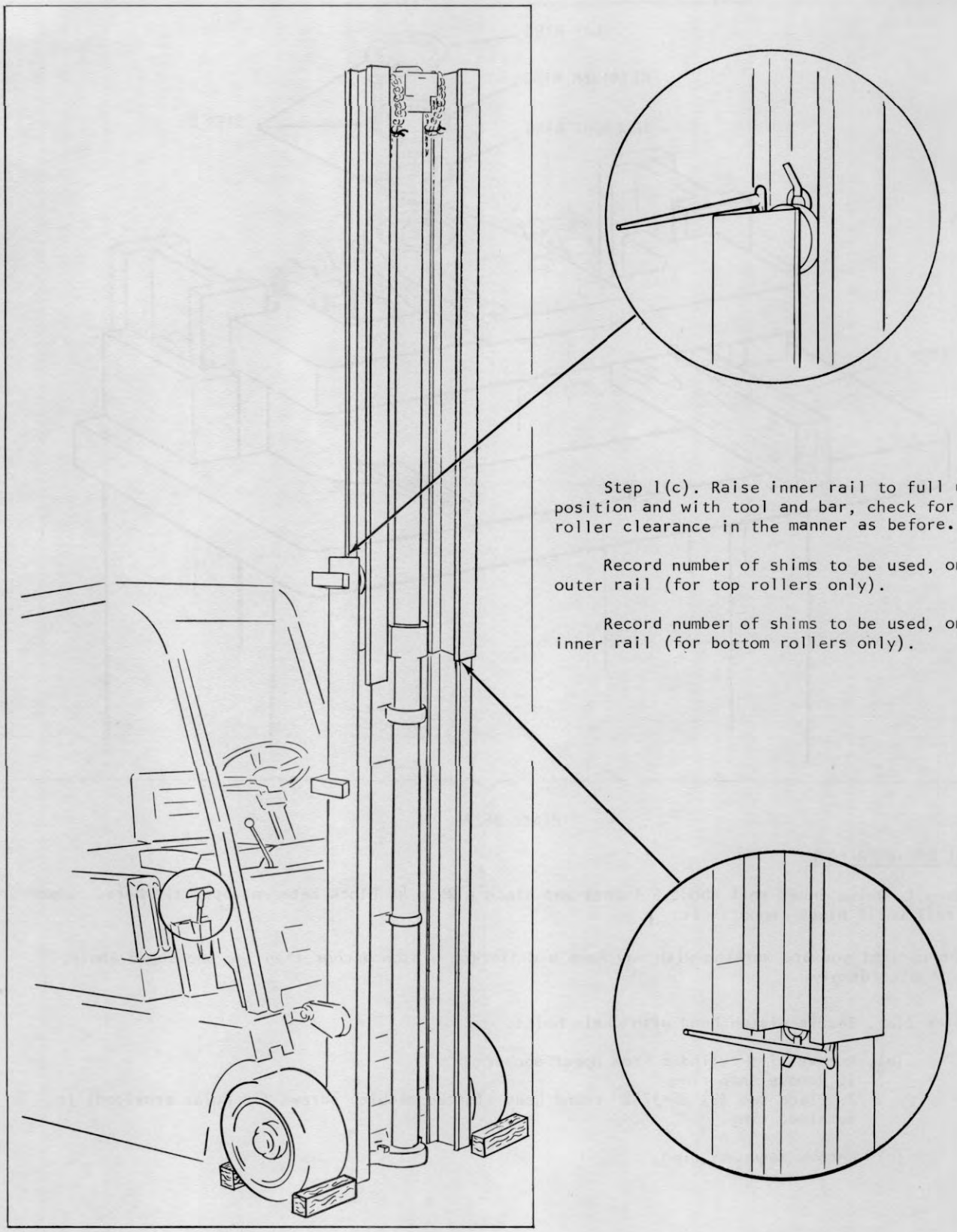

Step 1(c). Raise inner rail to full up position and with tool and bar, check for roller clearance in the manner as before.

Record number of shims to be used, on outer rail (for top rollers only).

Record number of shims to be used, on inner rail (for bottom rollers only).

Plate 9626

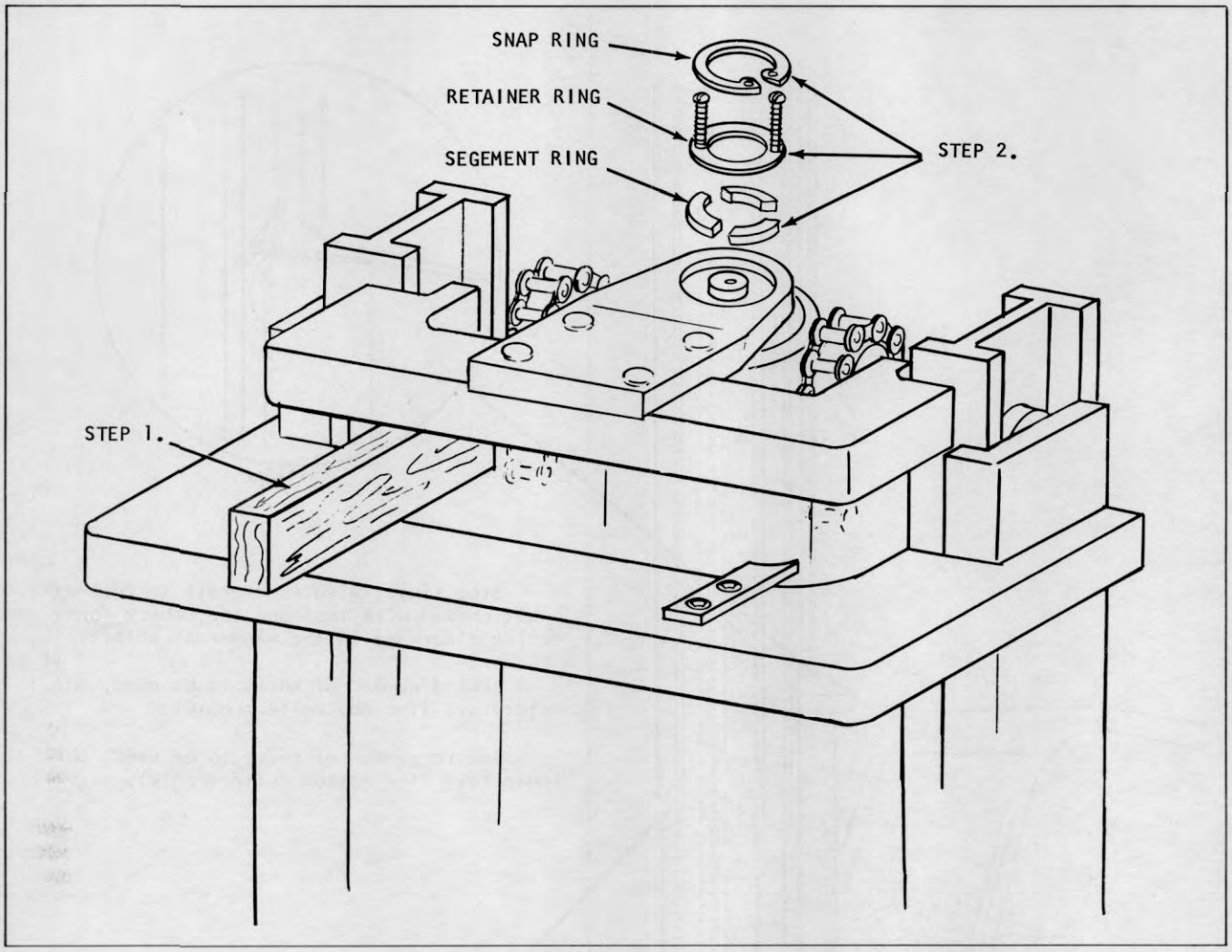

Plate 9627

REMOVAL OF INNER RAIL

Step 1. Raise inner rail about 5 inches and place a 2" x 4" block between upper tie bars. Lower inner rail until block supports it.

The upright you are working with may have a different piston anchor than the one shown above, remove it accordingly.

Step 2(a). Secure piston head with chain hoist.

(b). Remove lift cylinder from upper anchor
1. Remove snap ring
2. Place two (2) #6-32X2" round head slotted machine screws (in holes provided) in retainer ring.

(c). Remove segement ring.

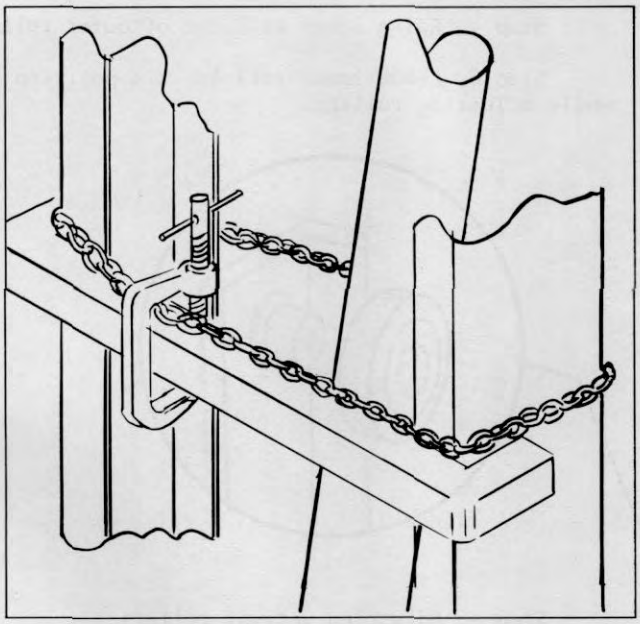

Plate 9628

Step 3. Place a safety strap or chain around outer rail as shown.

Step 4. Lower piston head out of anchor using pry bar. With the upright tilted forward the piston will rest on the strap or chain.

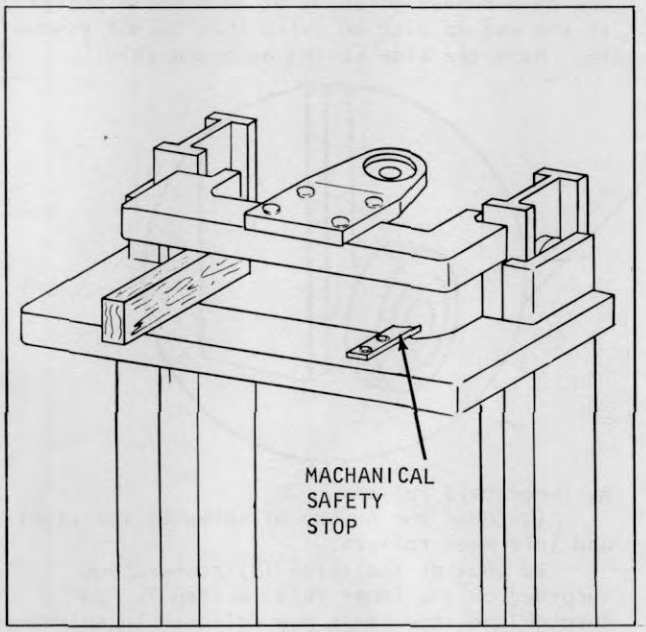

Plate 9629

Step 5. Remove mechanical safety stops with allen wrench.

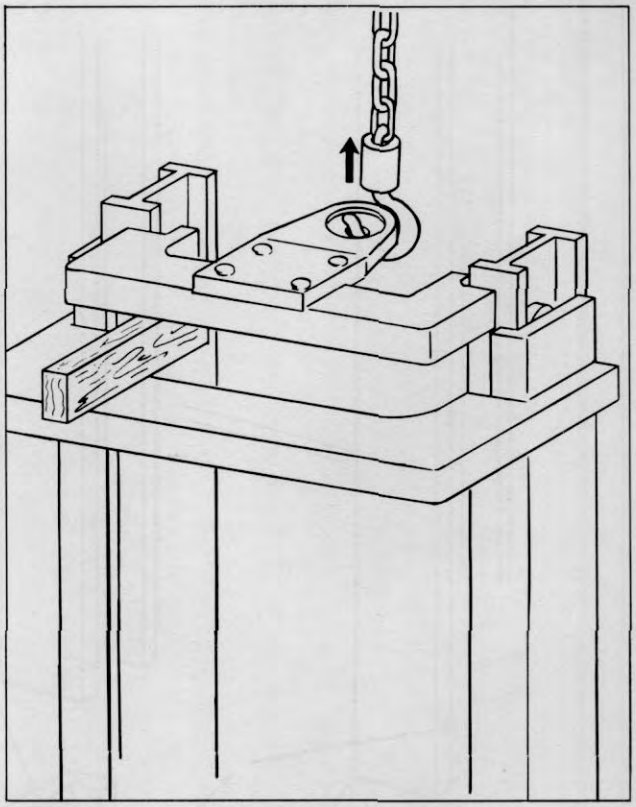

Plate 9630

Step 6. Place lifting device hook in hole of cylinder anchor. Raise about 2" and remove block between tie bars.

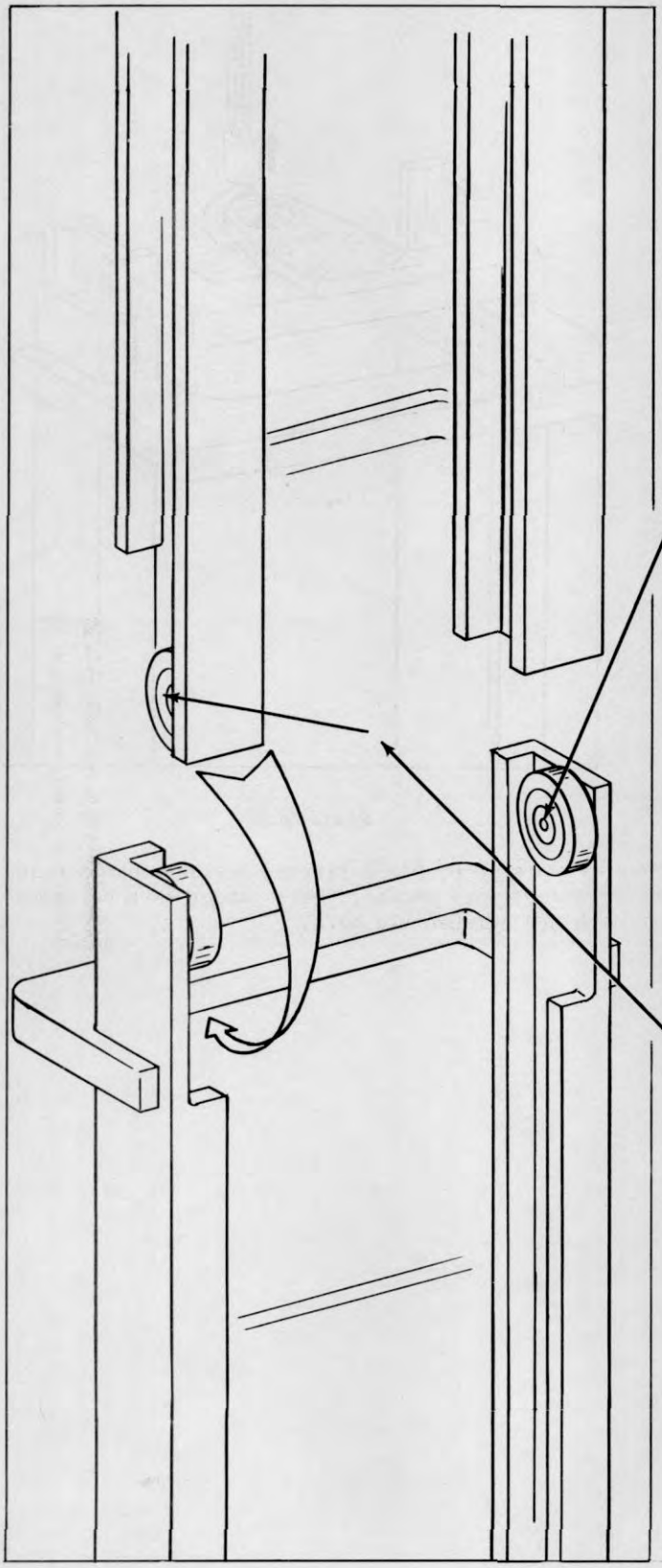

Plate 9631

Step 7. Raise inner rail out of outer rail.

Step 8. Leave inner rail in this position while adjusting rollers.

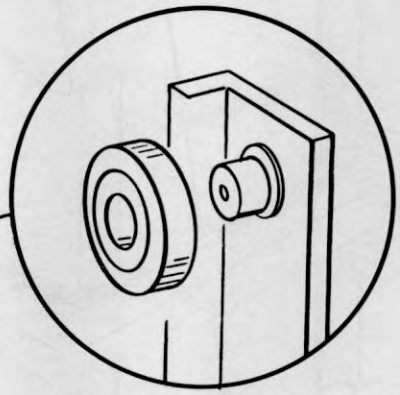

Step 9. Adjusting upright rollers:

A. Outer rail rollers.

1. Count the number of shims at the right and left hand rollers.

2. Look at the three (3) numbers you recorded on the outer rail in Step 1. The smallest of these numbers is the total number of shims to be added. A "0" means DO NOT add shims.

3. Your target for adjustment is to have the same number of shims at each upper roller. If you end up with an extra shim DO NOT remove it. Mark the side having an extra shim.

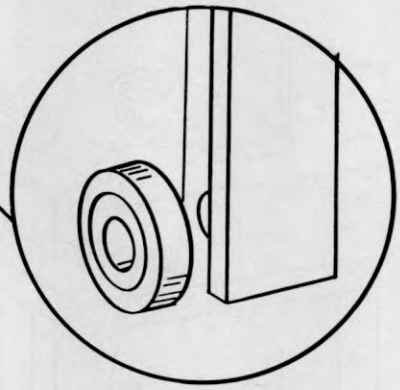

B. Inner rail rollers

1. Count the number of shims at the right and left hand rollers.

2. Look at the three (3) numbers you recorded on the inner rail in Step 1. Go through the same steps you followed in adjusting the upper rollers.

3. If you end up with an extra shim here too, besure it is on the same side as the extra upper shim.

C. Replace inner rail.

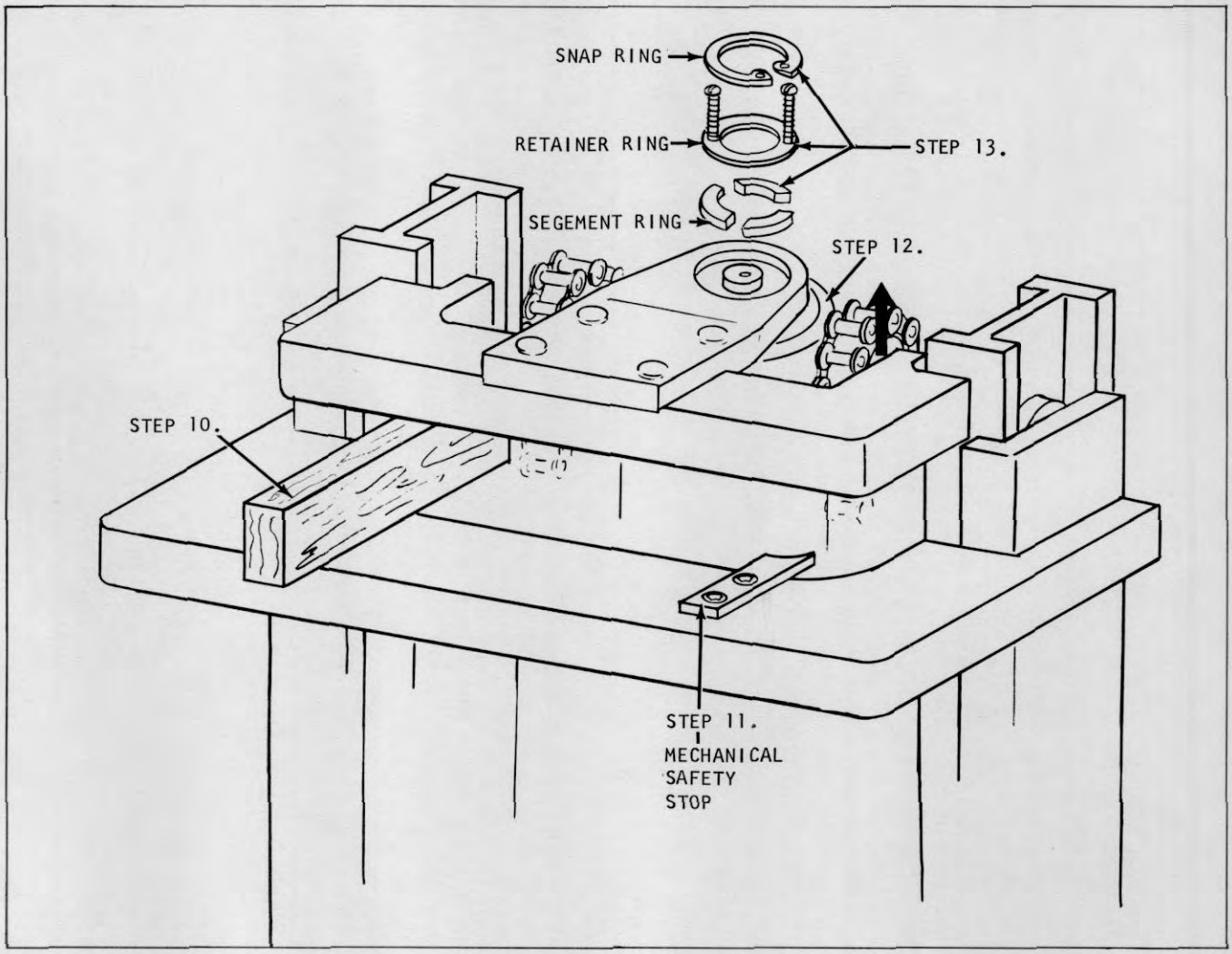

Plate 9632

Step 10(a). Place block between upper tie-bars. Lower inner rail until block supports it.

(b). Unhook lifting device.

Step 11. Install mechanical safety stops. Besure to install lock washer and screw fasteners.

Step 12. Guide piston into anchor with one hand and move the lift lever with the other.

Step 13. Secure lift cylinder to anchor.

(a). Install segement ring.

(b). Install retainer ring and remove both slotted machine screws.

(c). Install snap ring.

(d). Raise and lower to full positions checking piston and anchor. Remove block between tie bars.

UPRIGHT ROLLER ADJUSTMENT -- STD. AND F. F. TRIPLE

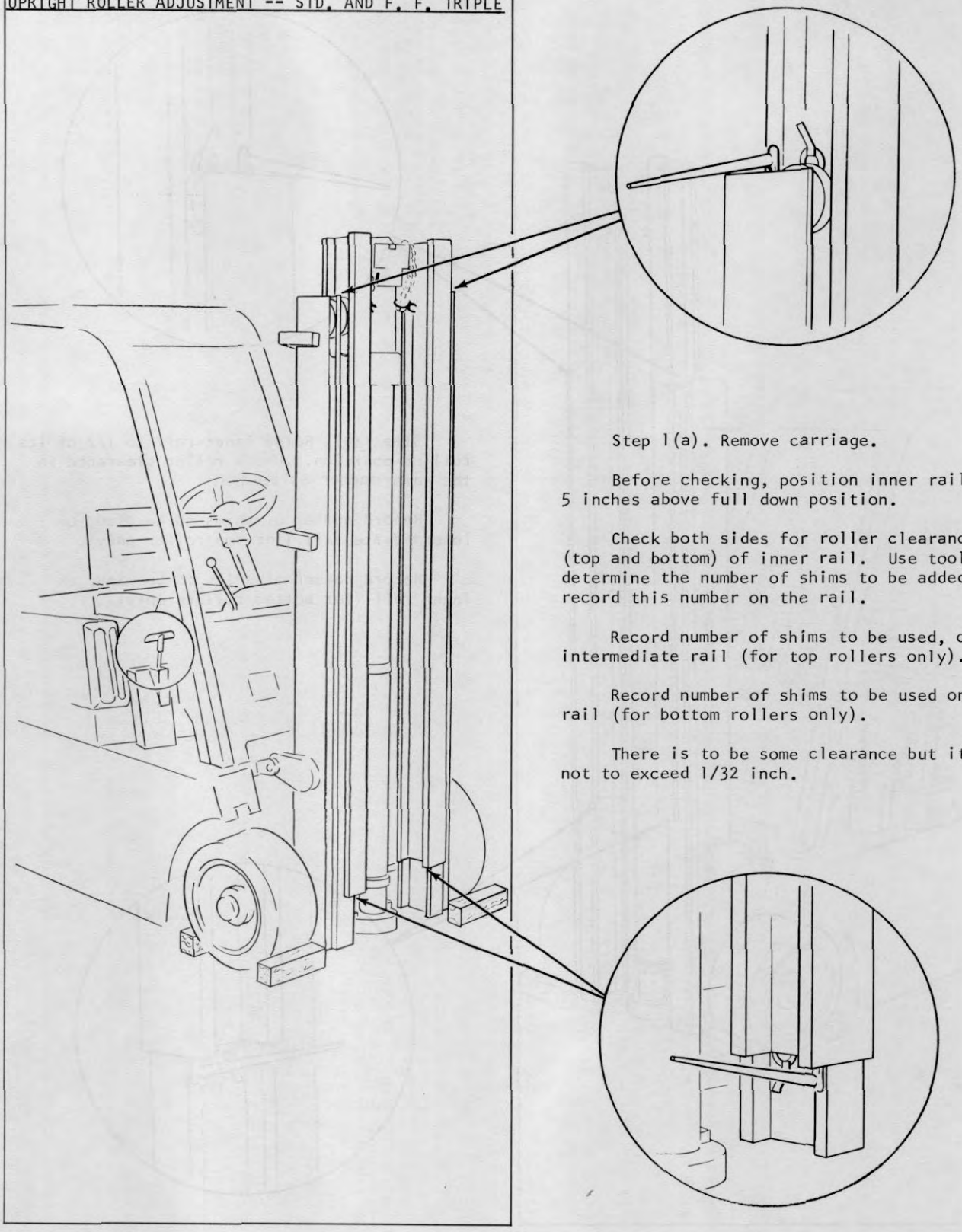

Step 1(a). Remove carriage.

Before checking, position inner rail about 5 inches above full down position.

Check both sides for roller clearance at (top and bottom) of inner rail. Use tool to determine the number of shims to be added and record this number on the rail.

Record number of shims to be used, on intermediate rail (for top rollers only).

Record number of shims to be used on inner rail (for bottom rollers only).

There is to be some clearance but it is not to exceed 1/32 inch.

Plate 9636

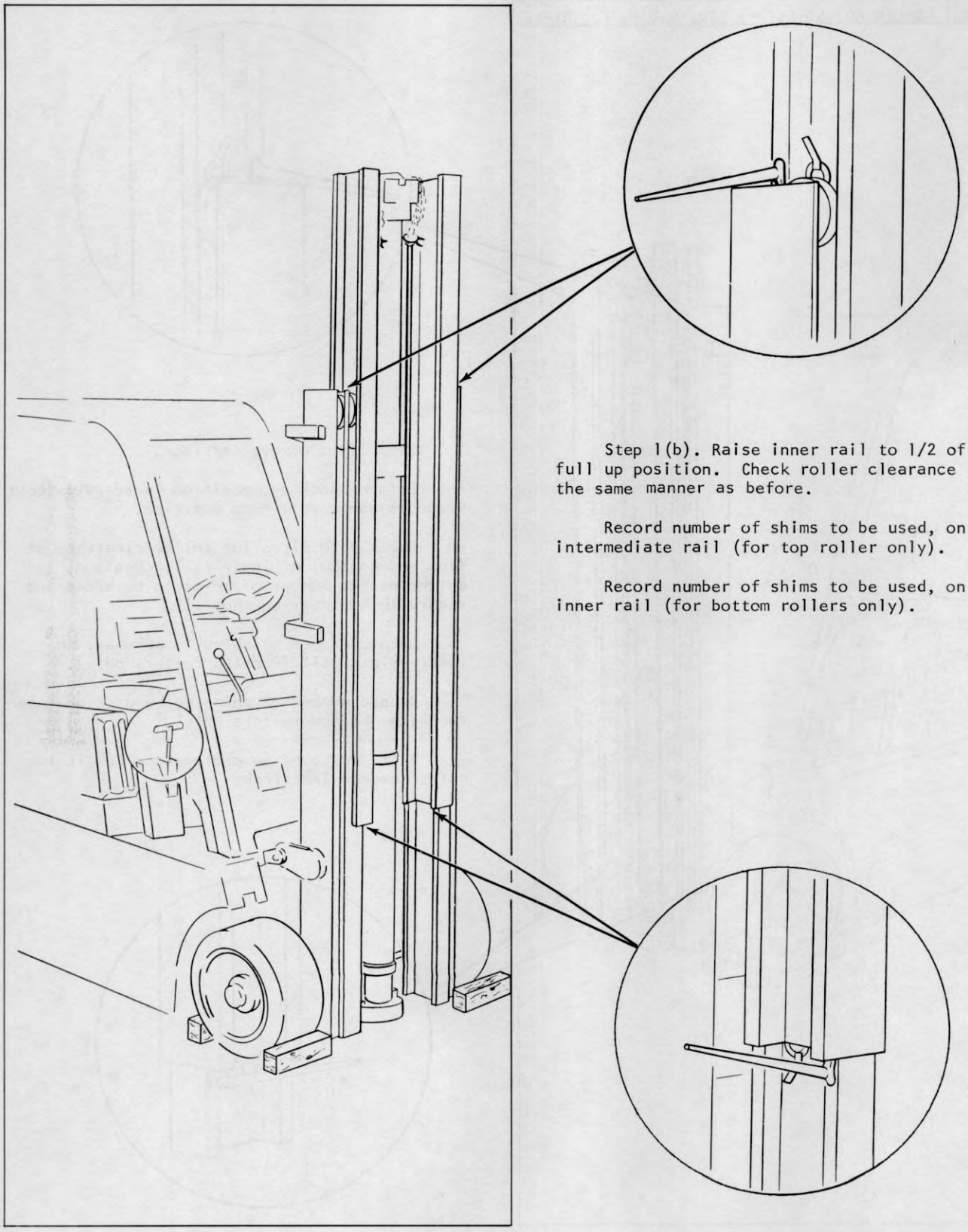

Step 1(b). Raise inner rail to 1/2 of its full up position. Check roller clearance in the same manner as before.

Record number of shims to be used, on intermediate rail (for top roller only).

Record number of shims to be used, on inner rail (for bottom rollers only).

Plate 9637

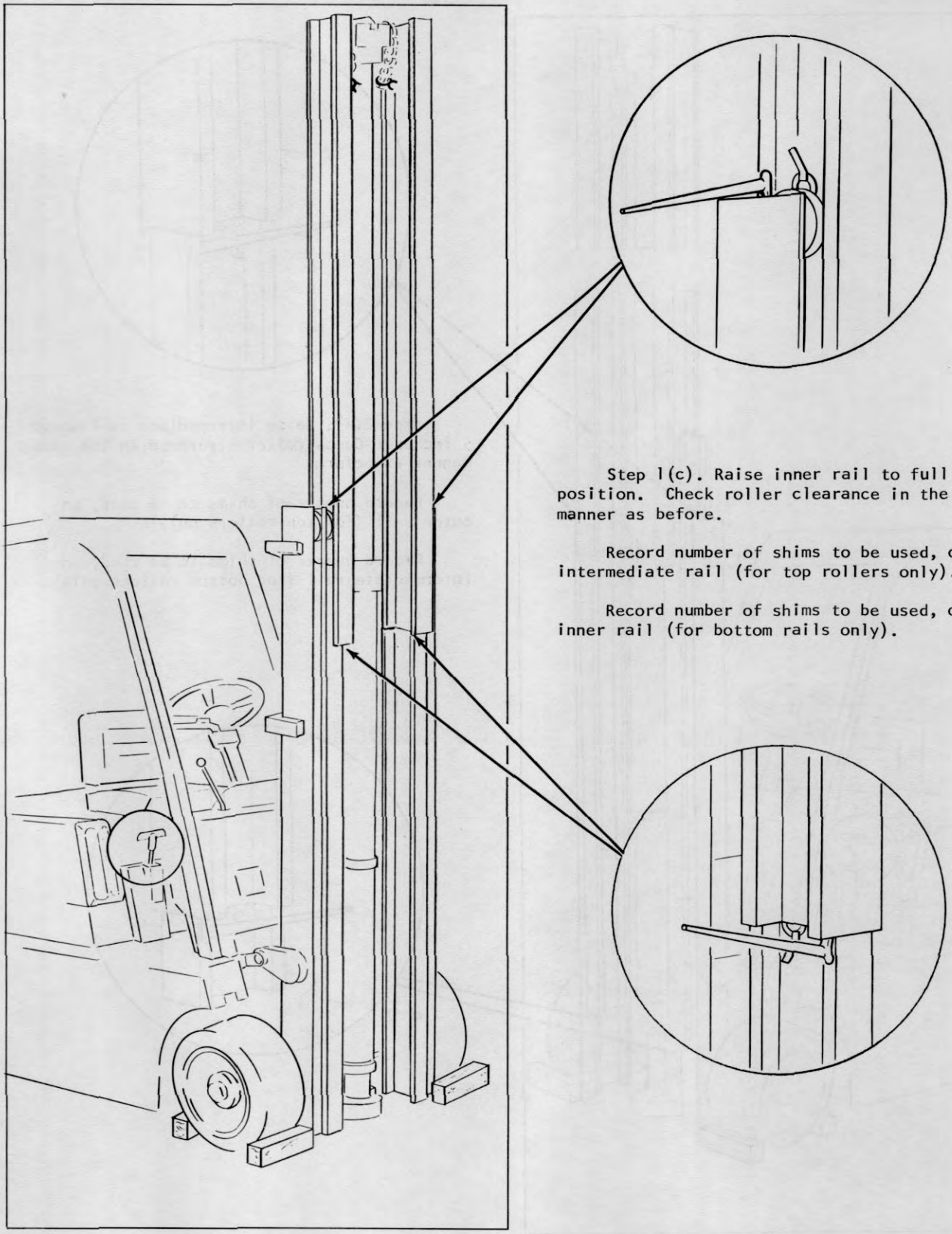

Step 1(c). Raise inner rail to full up position. Check roller clearance in the same manner as before.

Record number of shims to be used, on intermediate rail (for top rollers only).

Record number of shims to be used, on inner rail (for bottom rails only).

Plate 9638

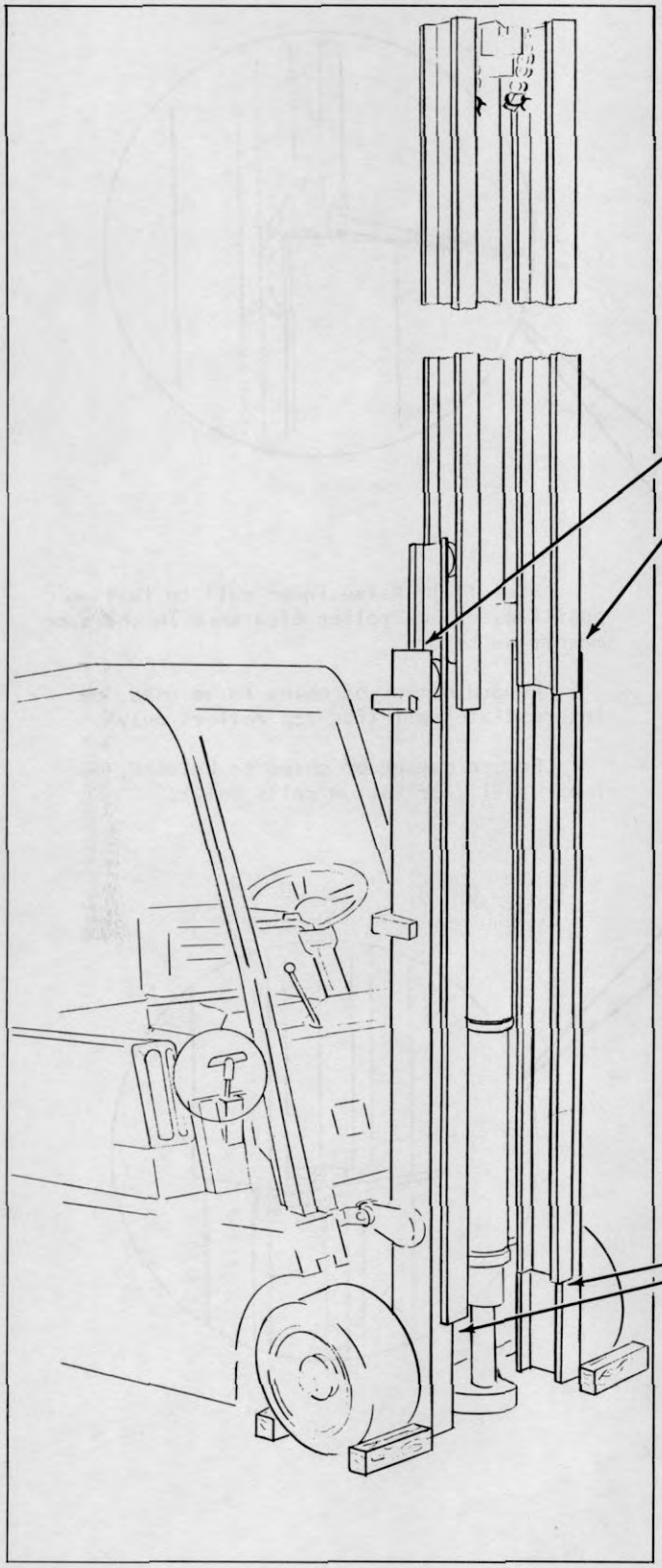

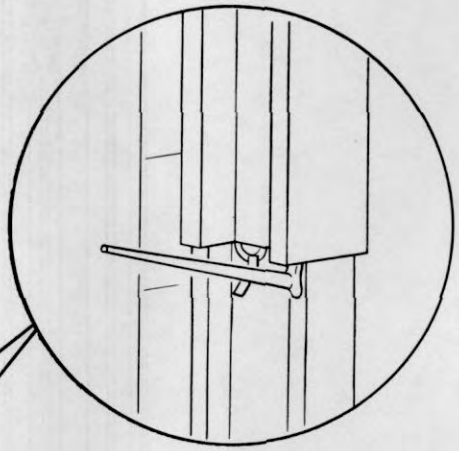

Stpe 2(a). Raise intermediate rail about 5 inches. Check roller clearance in the same manner as before.

Record number of shims to be used, on outer rail (for top rollers only).

Record number of shims to be used, on intermediate rail (for bottom rollers only).

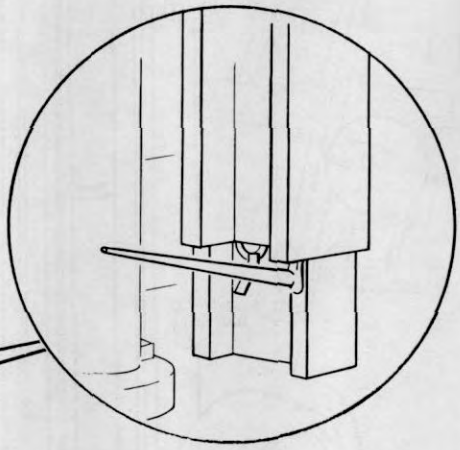

Plate 9639

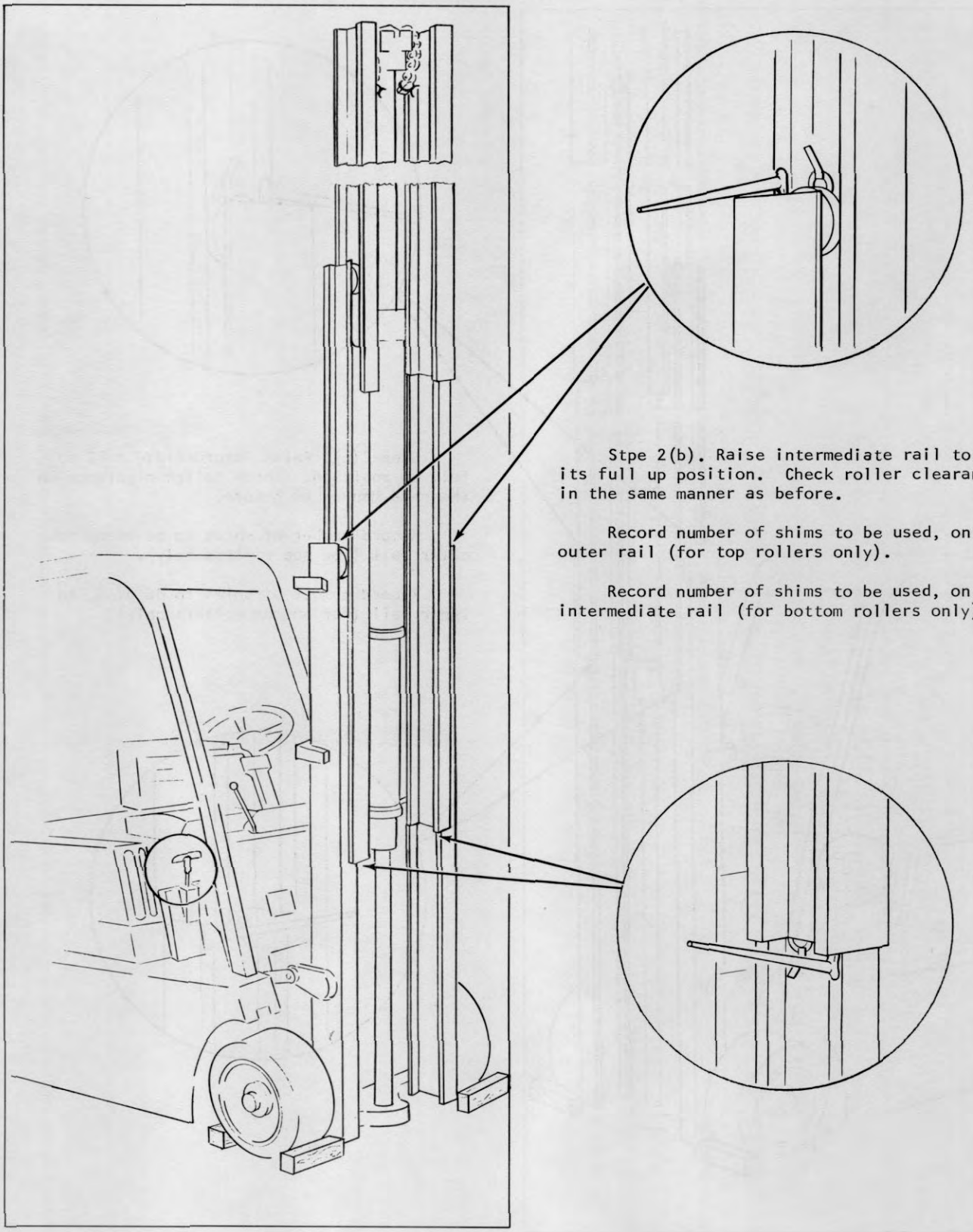

Stpe 2(b). Raise intermediate rail to 1/2 its full up position. Check roller clearance in the same manner as before.

Record number of shims to be used, on outer rail (for top rollers only).

Record number of shims to be used, on intermediate rail (for bottom rollers only).

Plate 9640

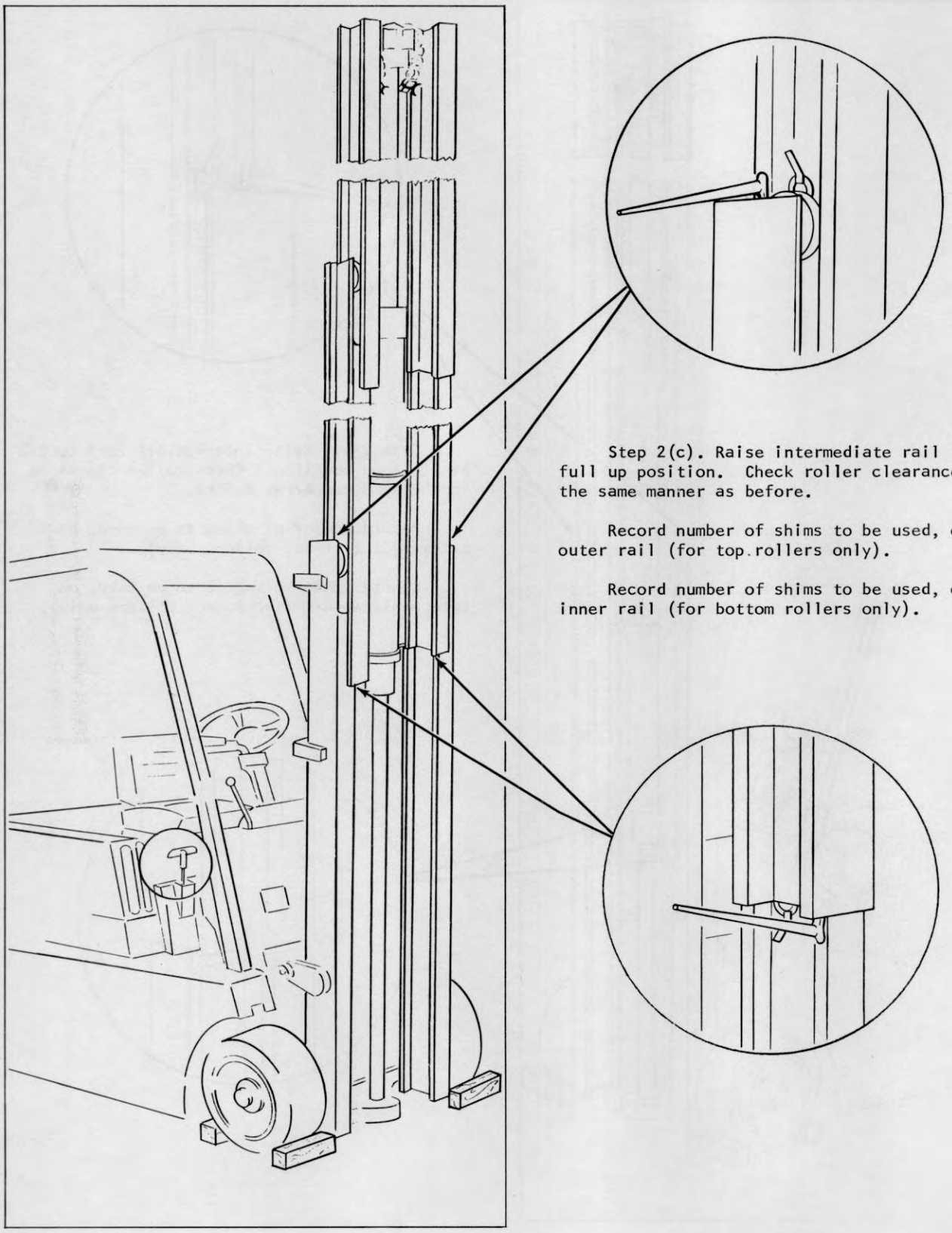

Step 2(c). Raise intermediate rail to full up position. Check roller clearance in the same manner as before.

Record number of shims to be used, on outer rail (for top rollers only).

Record number of shims to be used, on inner rail (for bottom rollers only).

Plate 9641

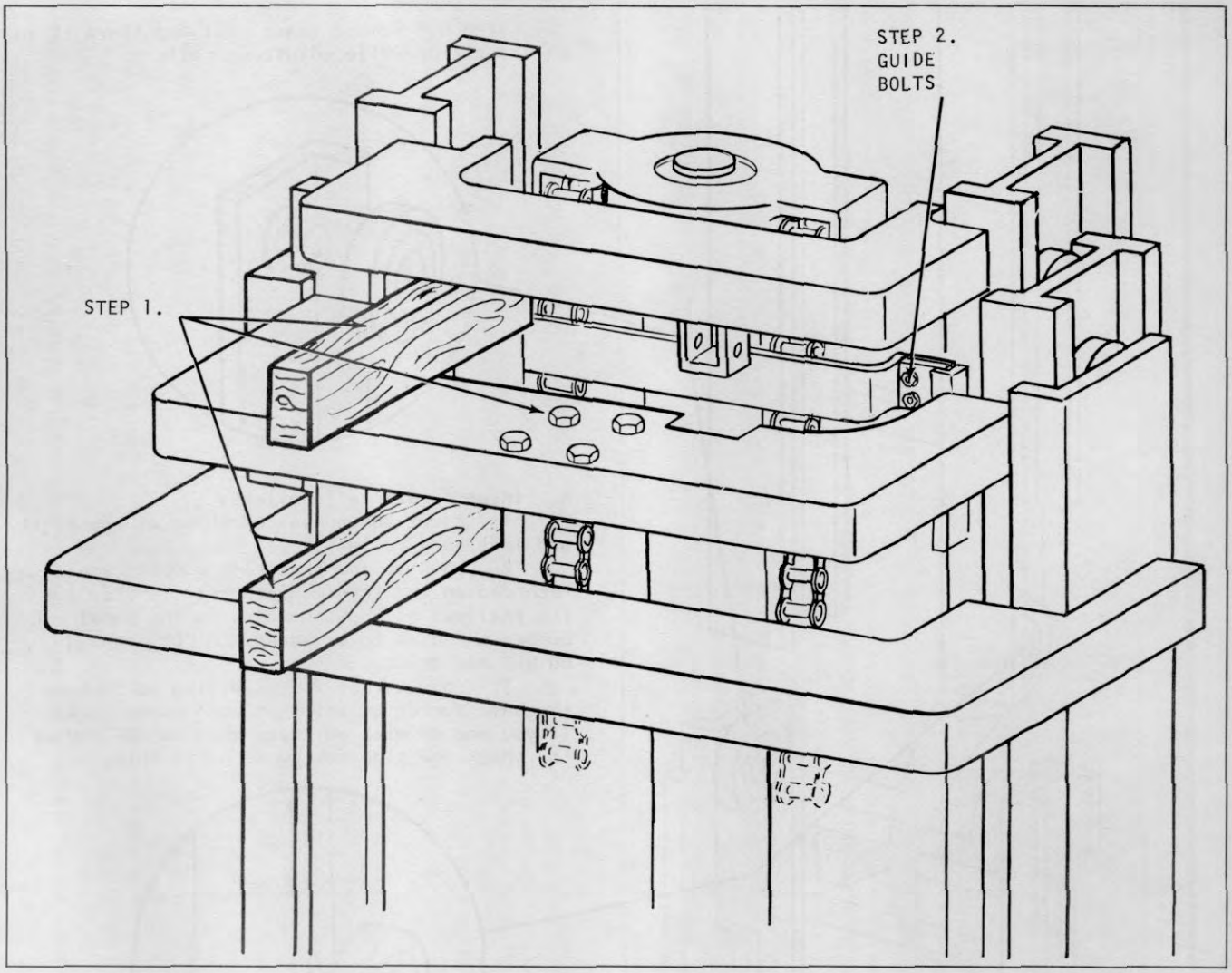

Plate 9642 Standard Triple Piston Head

REMOVAL OF RAILS--STANDARD TRIPLE

Step 1. Place blocks between inner and intermedaite rail tie bars. Remove mechanical safety stops.

Step 2. Pull piston head down far enough to get at piston head guide bolts. Remove both piston head guides.

Step 3. Pull piston head to full down position.

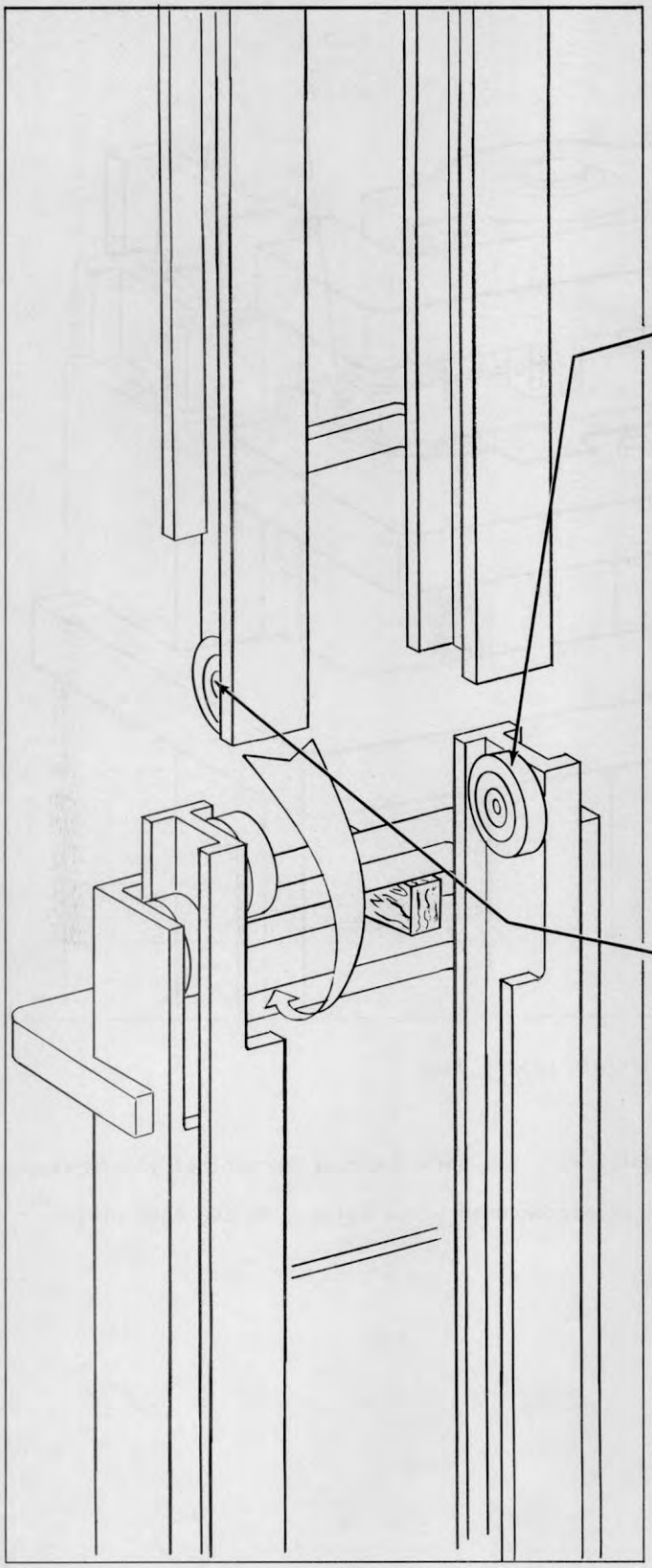

Step 4. Remove inner rail and leave it in this position while adjusting rollers.

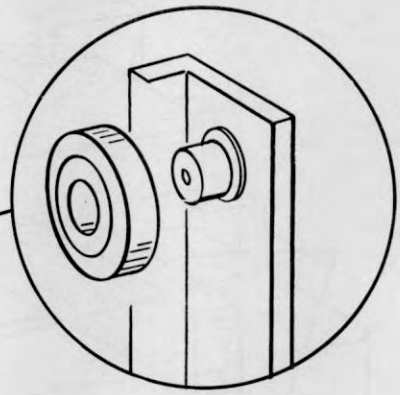

A. Intermediate rail rollers:

1. Count the number of shims at the right and left hand rollers.

2. Look at the three (3) numbers you recorded on the intermediate rail in Step 1. The smallest of these numbers is the total number of shims to be added. A "0" means DO NOT add shims.

3. Your target for adjusting is to have the same number of shims at each upper roller. If you end up with an extra shim DO NOT remove it. Mark the side having an extra shim.

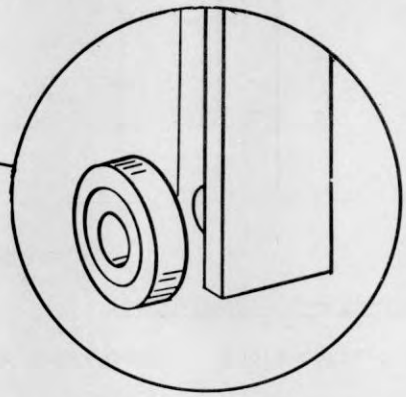

B. Inner rail rollers.

1. Count the number of shims at the right and left hand rollers.

2. Look at the three (3) numbers you recorded on the inner rail in Step 1. Go through the same steps you followed in adjusting the upper rollers.

3. If you end up with an extra shim here too, be sure it is on the same side as the extra upper shim.

C. Replace inner rail.

N O T E

Refer to next page.

Plate 9643

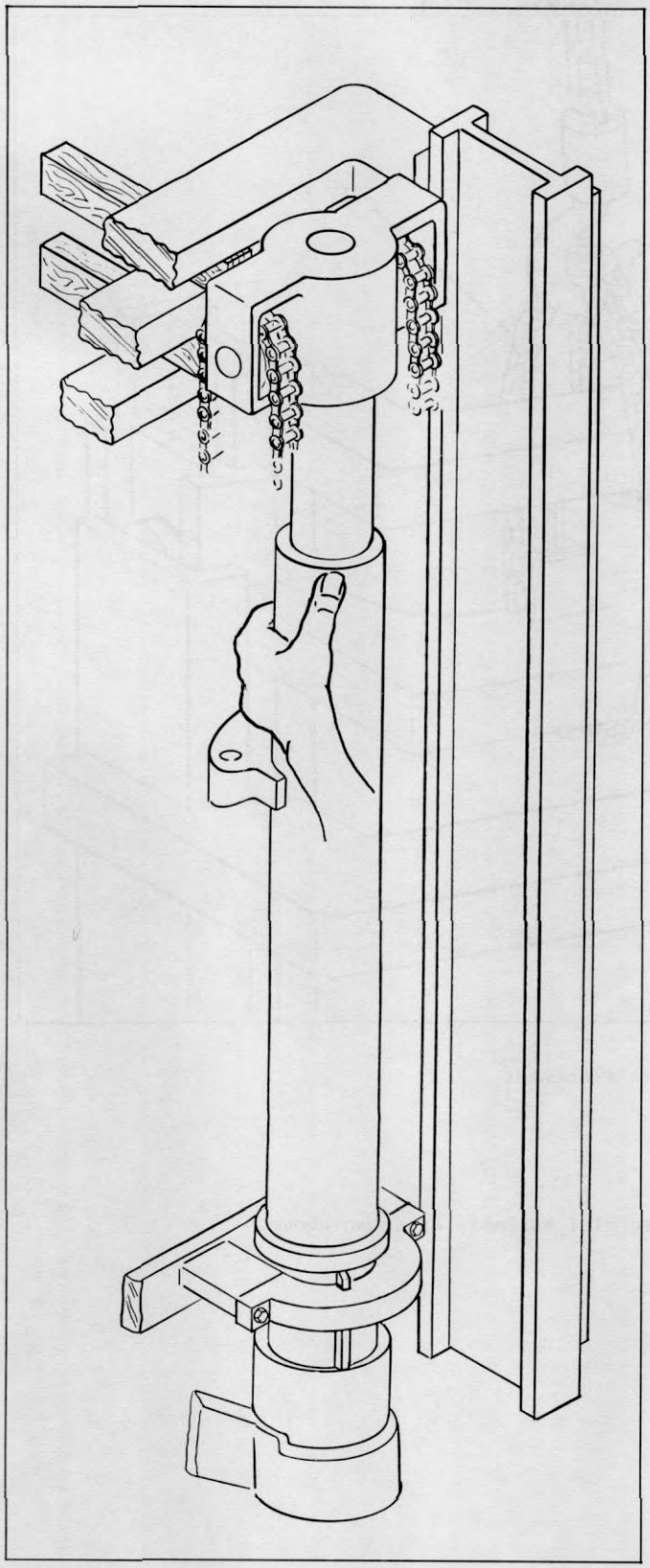

Plate 9644

N O T E

With one hand pull piston head forward to let tie bar pass by piston head freely.

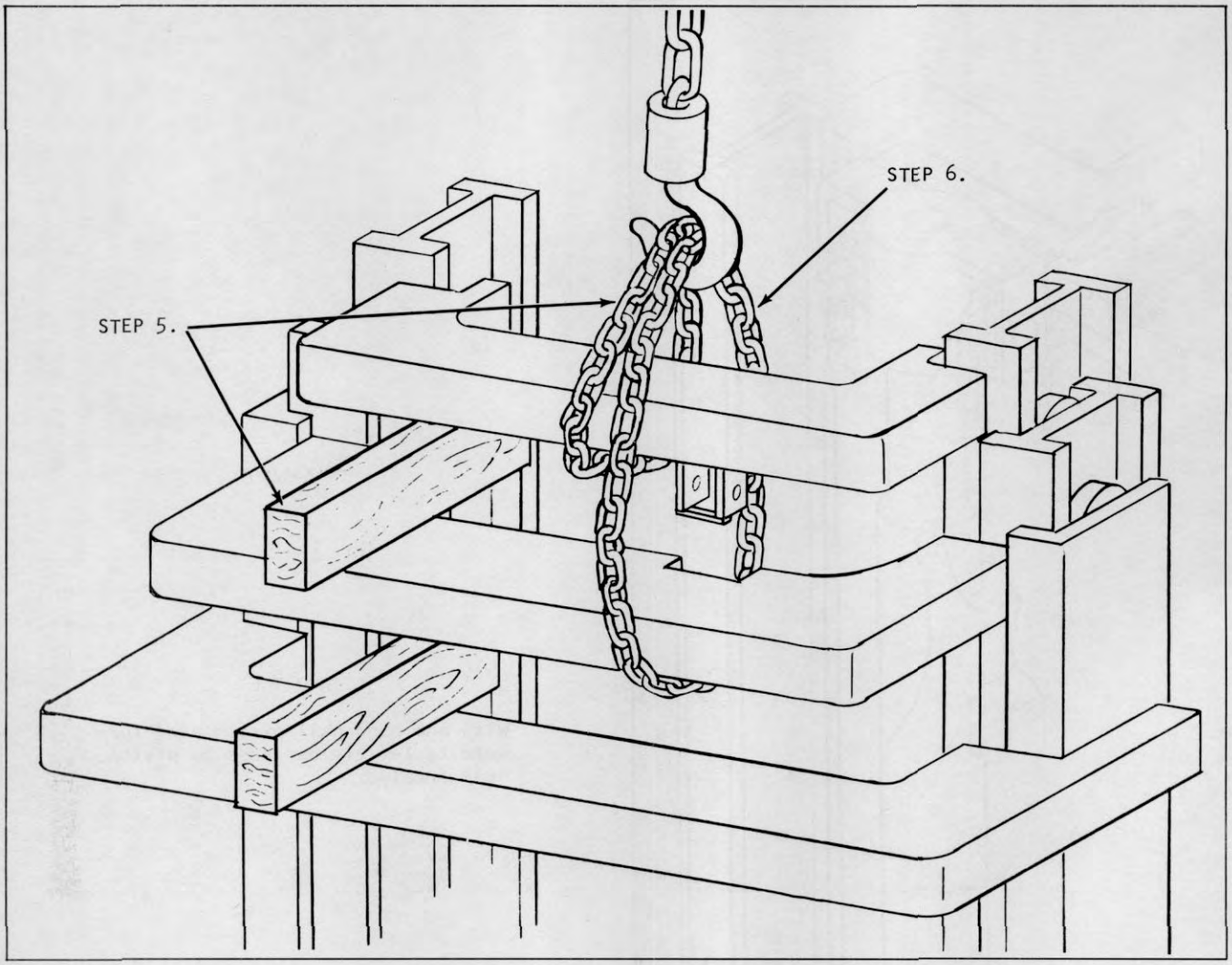

Plate 9645 Chain Placement

Step 5. Replace block and remove chain hoist.

Step 6. Remove intermediate rail assembly.

(a). Place chain around inner and intermediate rial assembly as shown above.

Step 6(b). Place a strap or chain around outer rail and secure. This will support lift cylinder.

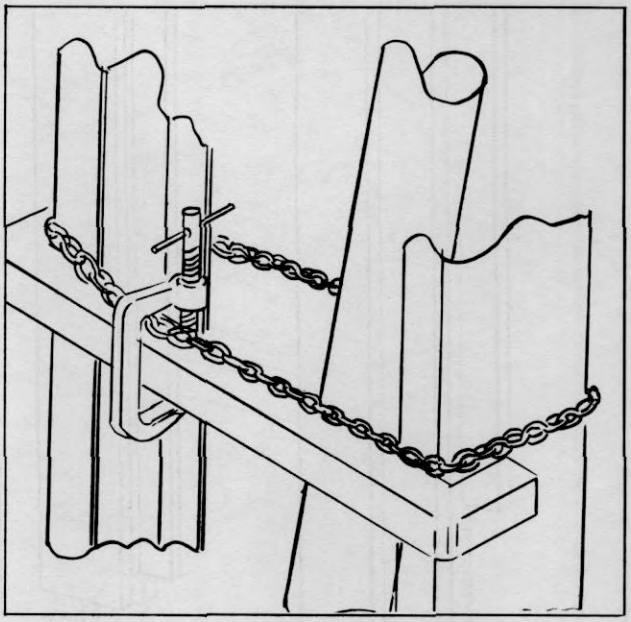

Plate 9628

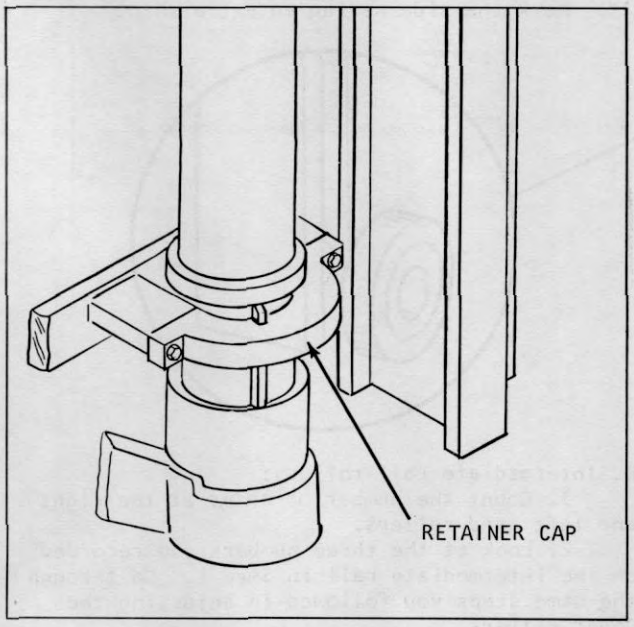

Plate 9646

Step 6(c). Remove lift cylinder retainer cap.

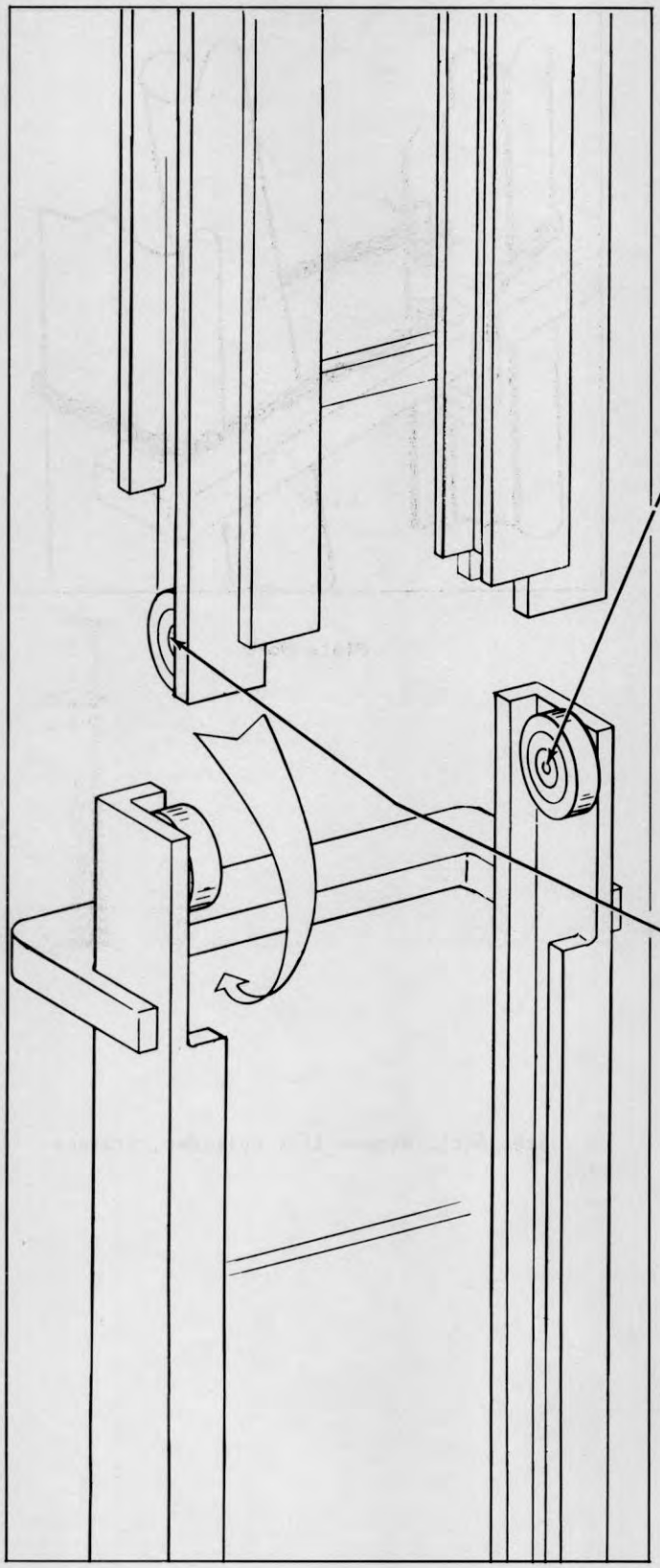

Step 6(d). Lean cylinder forward to rest on strap, as shown in Plate

Step 6(e). Leave intermediate rail assembly in this position while adjusting rollers.

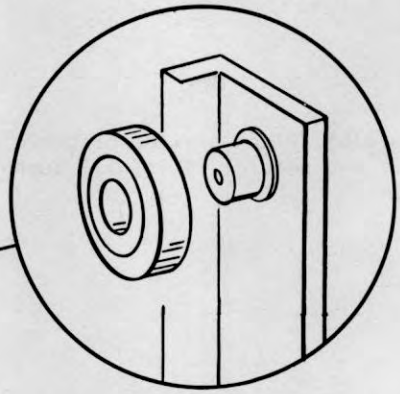

A. Outer rail rollers:

1. Count the number of shims at the right and left hand rollers.

2. Look at the three (3) numbers you recorded on the outer rail in Step 1. The smallest of these numbers is the total number of shims to be added. A "0" means DO NOT add shims.

3. Your target for adjustment is to have the smae number of shims at each upper roller. If you end up with an extra shim DO NOT remove it. Mark the side having an extra shim.

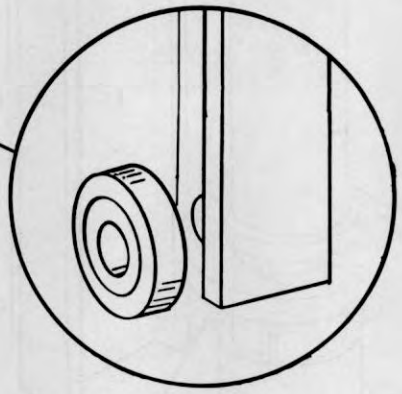

B. Intermediate rail rollers:

1. Count the number of shims at the right and left hand rollers.

2. Look at the three numbers you recorded on the intermediate rail in Step 1. Go through the same steps you followed in adjusting the upper rillers.

3. If you end up with an extra shim here too, be sure it is on the same side as the extra upper shim.

C. Replace intermediate rail assembly.

Plate 9647

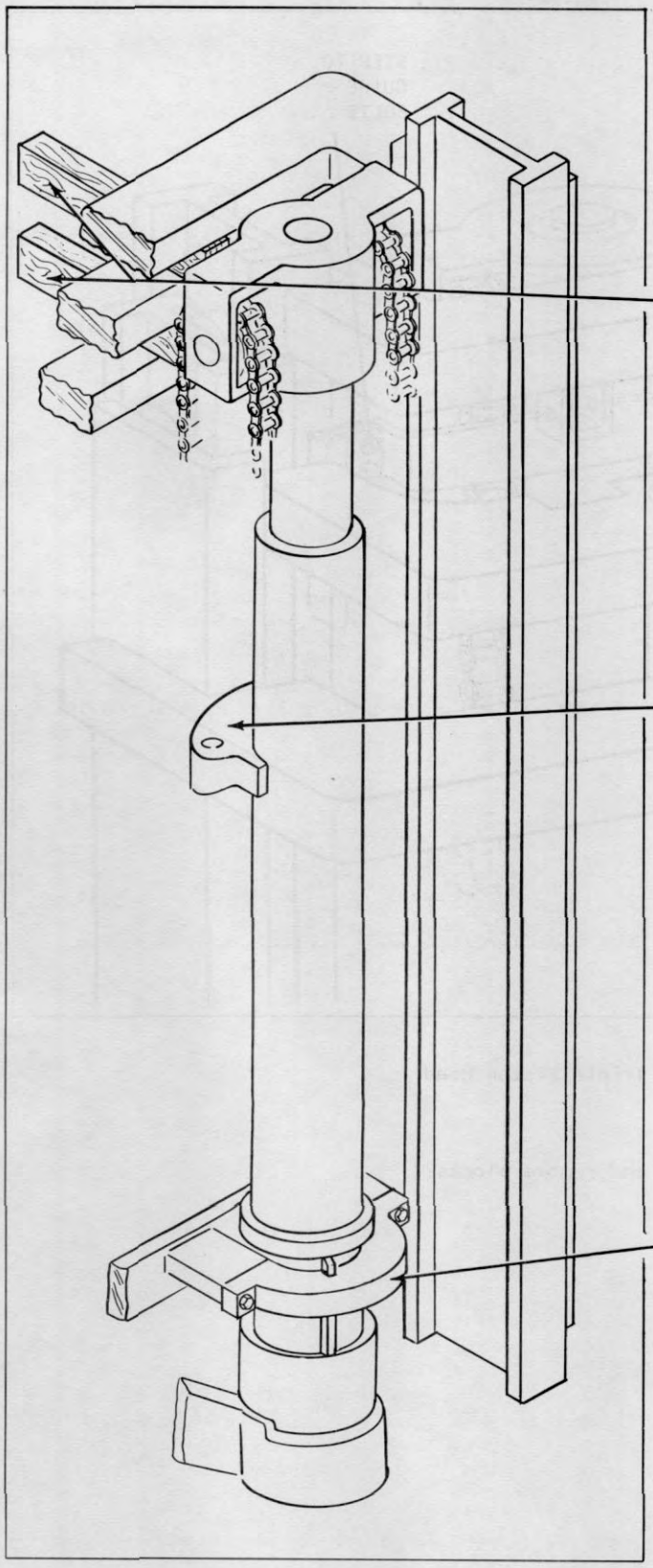

Step 6(f). Replace block between intermediate rail assembly tie bar and remove chain.

Step 7. Place chain around chain anchors on cylinder. Use hoist to support cylinder.

Step 8. Remove supporting strap.

Step 9. Install cylinder retainer cap.

Plate 9648

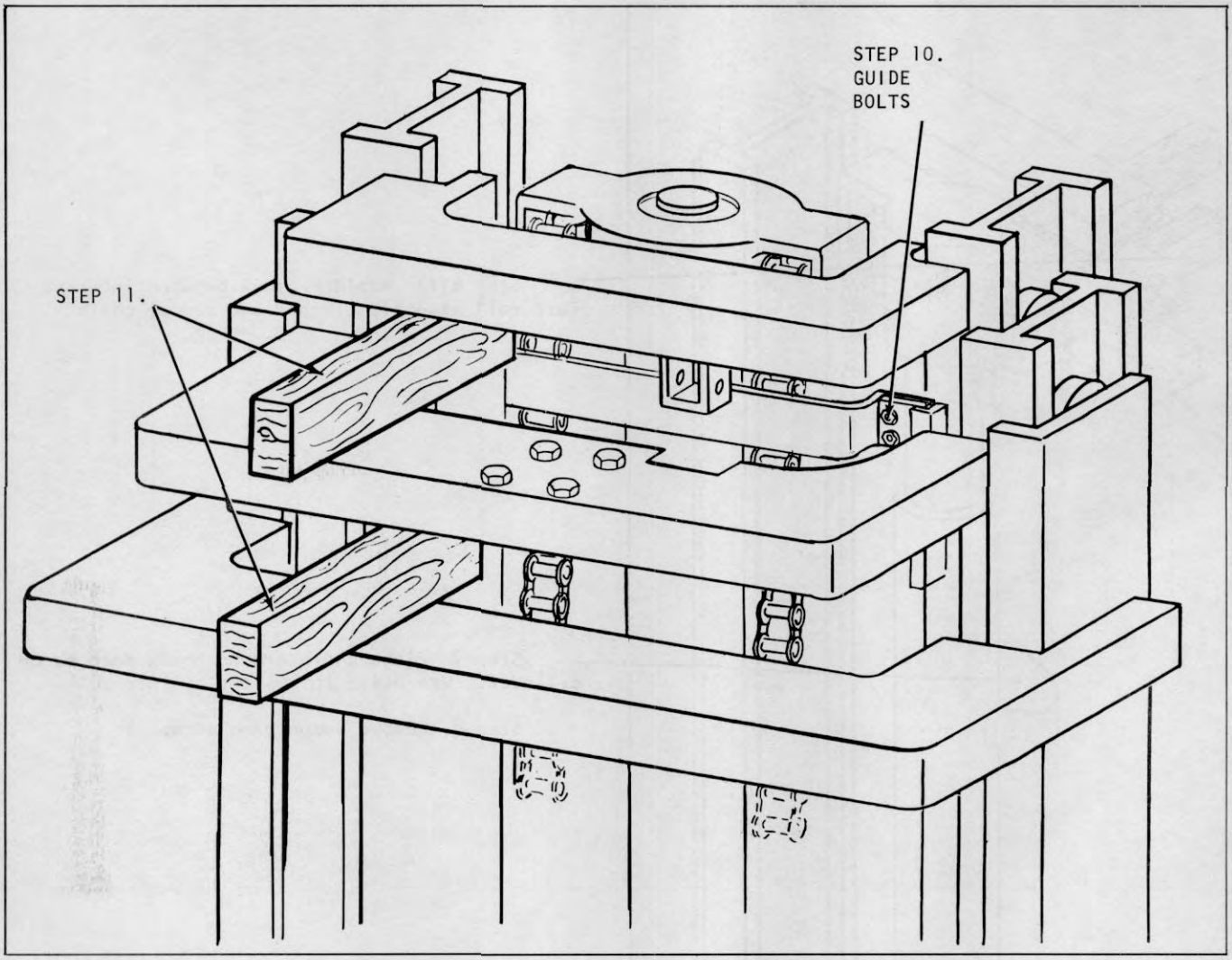

Plate 9649 Standard Triple Piston Head

Step 10. Install both piston head guides.

Step 11. Install mechanical stop. Raise rails and remove blocks.

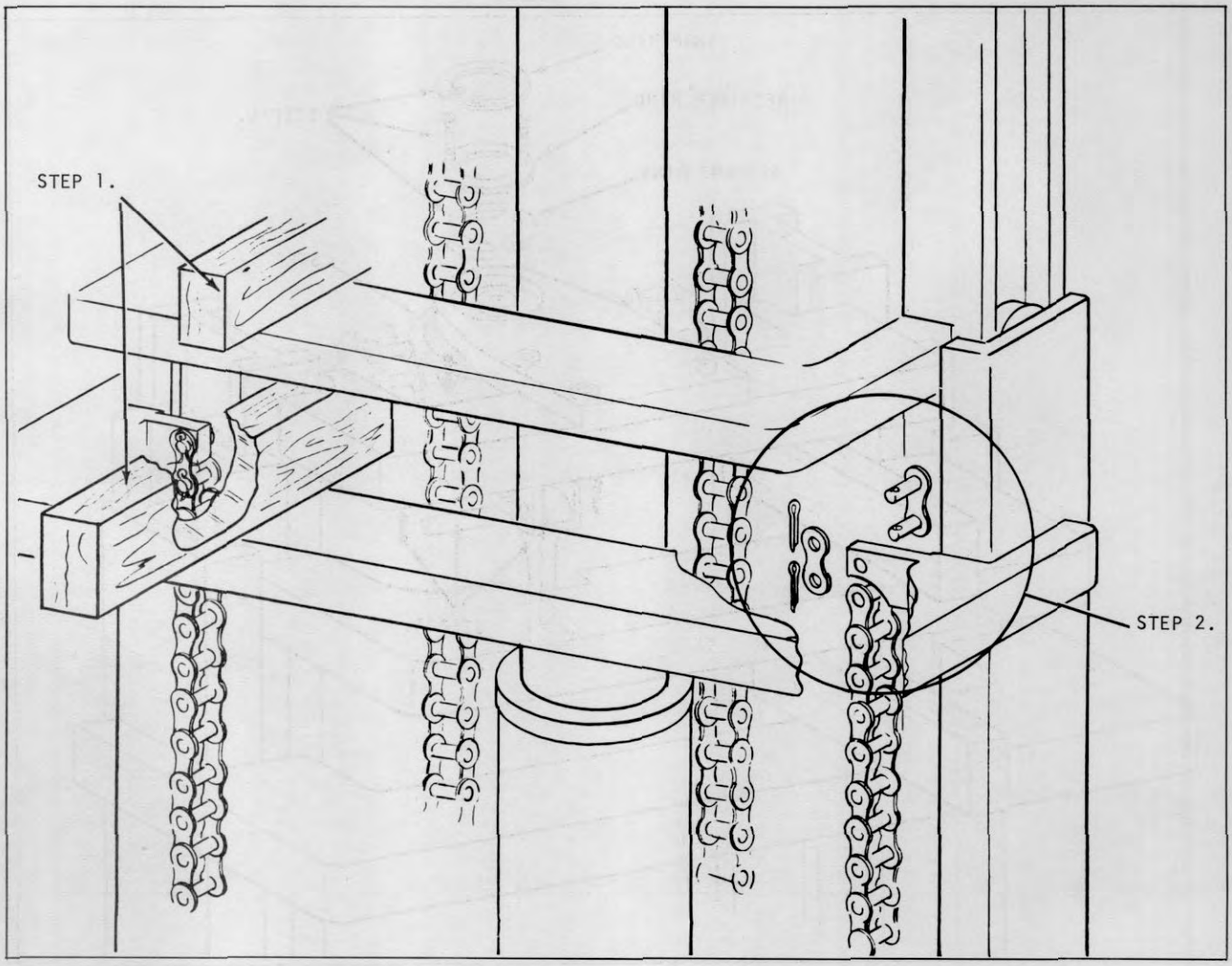

Plate 9650 Rear Lift Cylinder Removal

UPRIGHT REMOVAL--FULL FREELIFT TRIPLE

Step 1. Place blocks between inner and intermediate rail tie bars.

Step 2. Remove rear lift chains at the top or master link end.

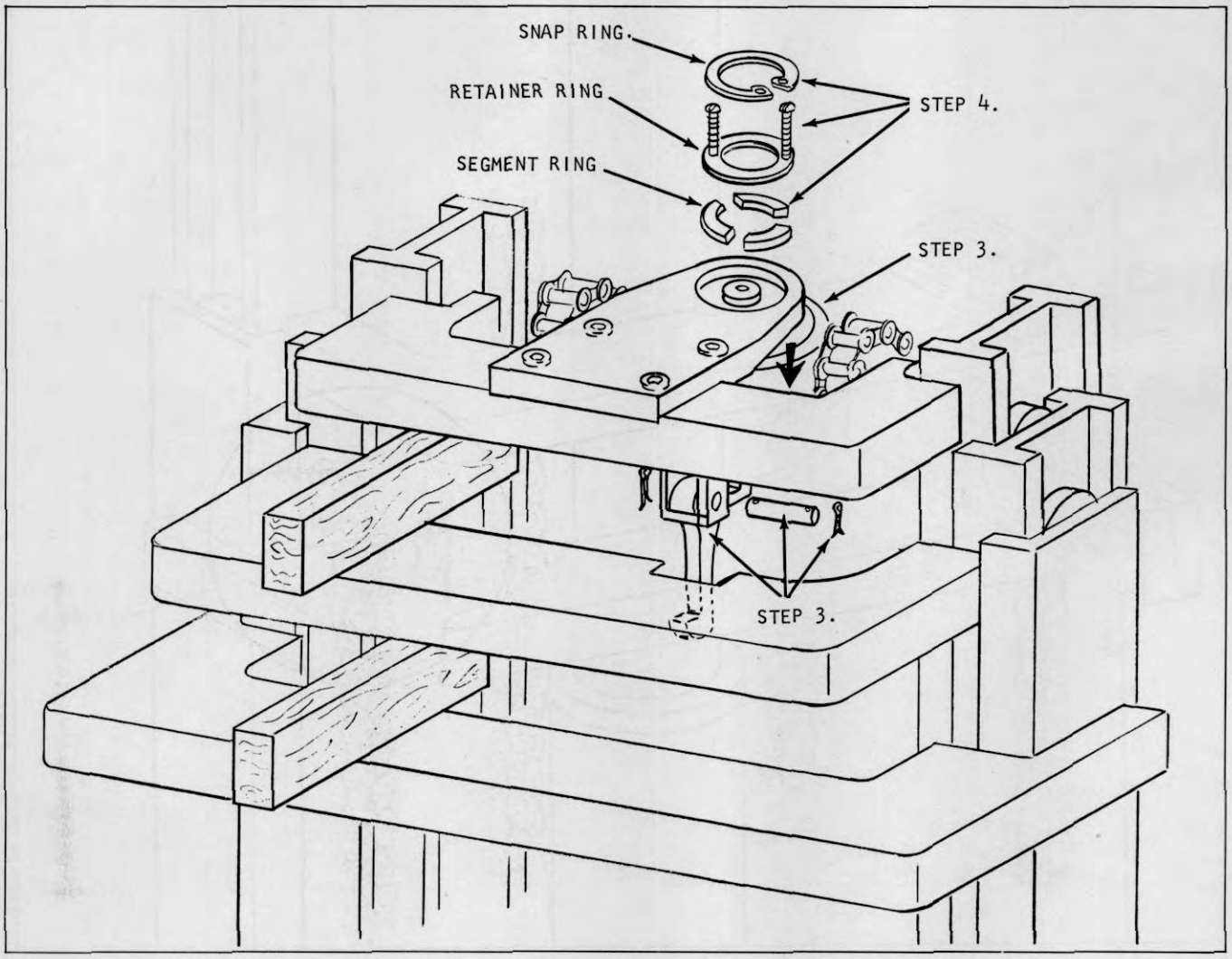

Plate 9651 F.F.T. Piston Head

Step 3. Pull piston head down

Remove mechanical safety stop pin and remove stop.

Step 4(a). Secure piston head with chain hoist.

(b). Remove lift cylinder from upper anchor.
1. Remove snap ring.
2. Place two (2) #6-32X2" round head slotted machine screws (in holes provided) in retainer ring.

(c). Remove segment ring.

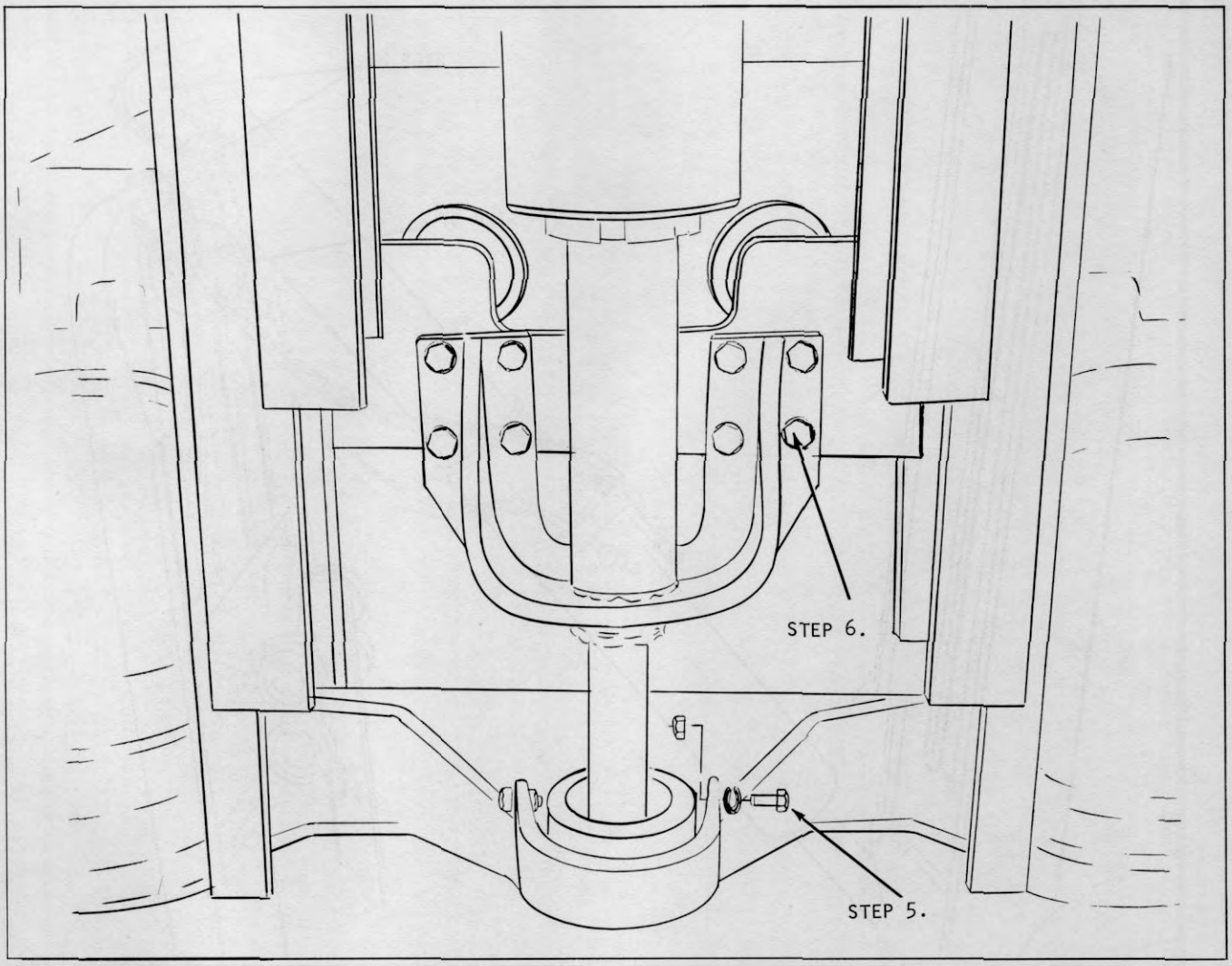

Plate 9652 Cylinder Lifting Bracket

Step 5. Remove lift cylinder support bolts.

Step 6. Remove cylinder lifting bracket.

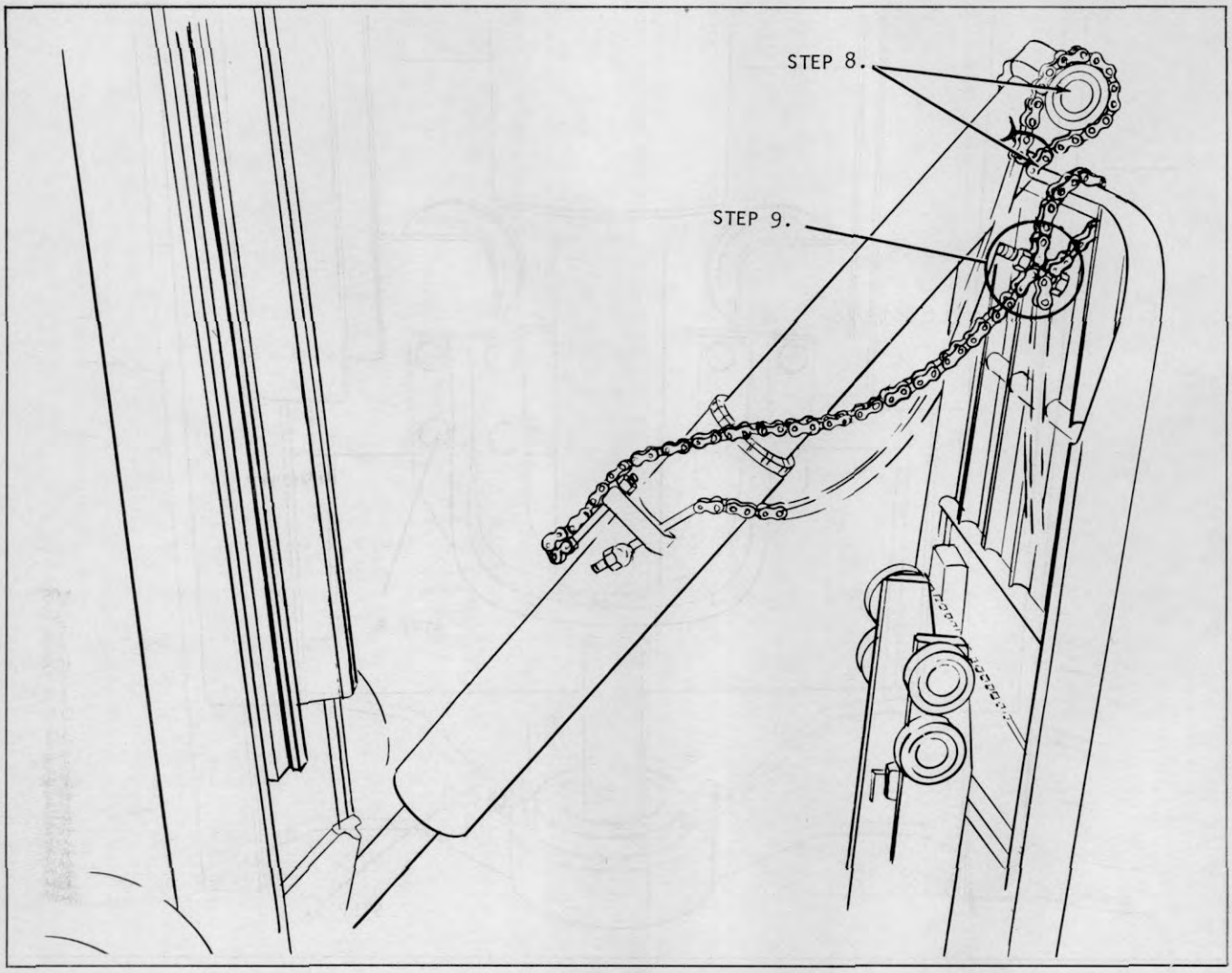

Plate 9653 Supporting Cylinder

Step 7. Lower cylinder and lean it toward the load back rest (on the carriage).

Step 8. Place pading type material on the load back rest to prevent scoring of the cylinder.

Let cylinder rest onto load back rest.

Step 9. Place rear lift chains around top bar of load back rest and place bolts through chains, as shown above. This will prevent cylinder from falling.

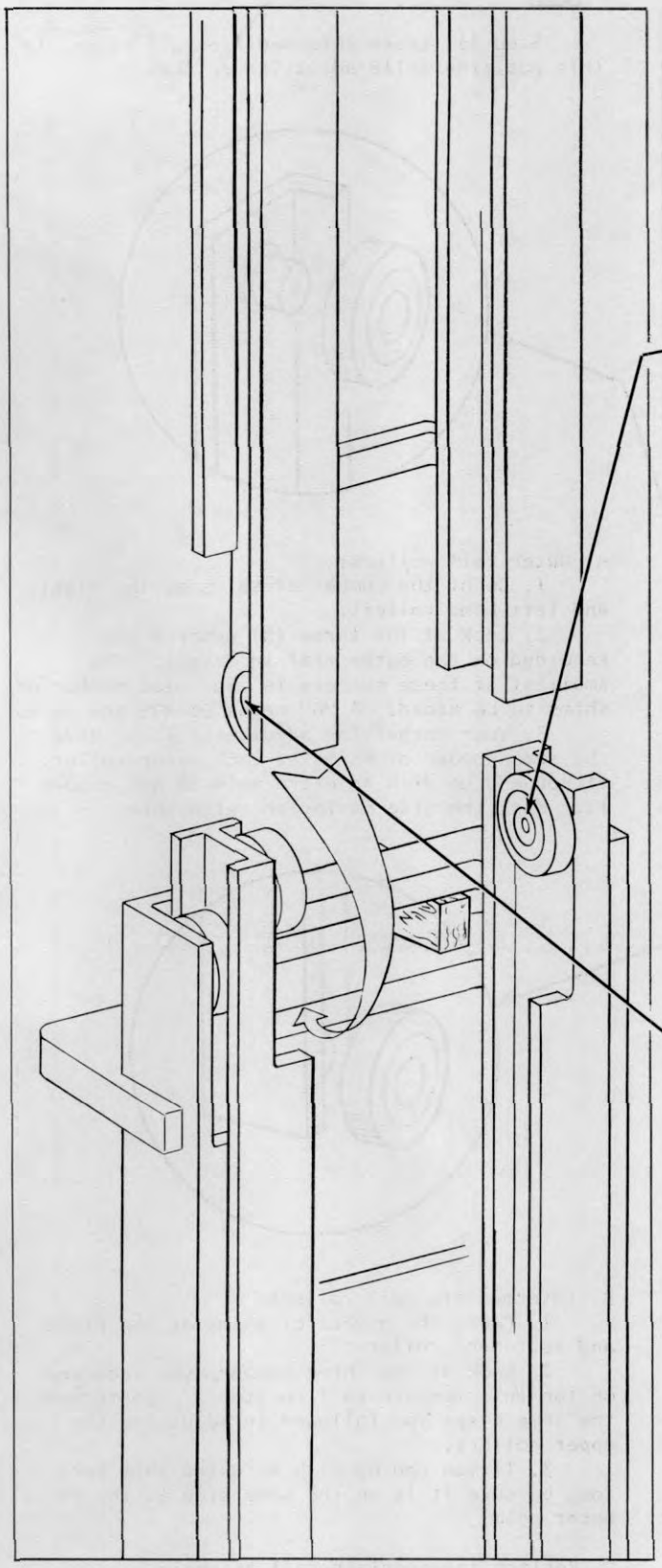

Plate 9654

Step 10. Remove inner rail and leave it in this position while adjusting rollers.

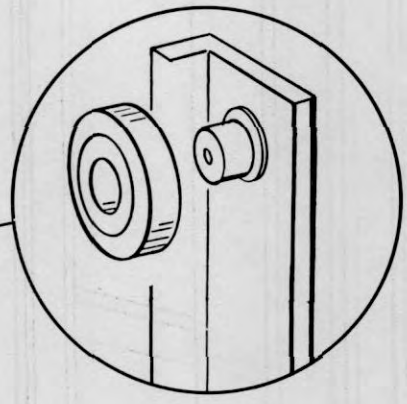

A. Intermediate rail rollers:

1. Count the number of shims at the right and left hand rollers.

2. Look at the three (3) numbers you recorded on the intermediate rail in Step 1. The smallest of these numbers is the total number of shims to be added. A "0" means DO NOT add shims.

3. Your target for adjusting is to have the same number of shims at each upper roller. If you end up with an extra shim DO NOT remove it. Mark the side having an extra shim.

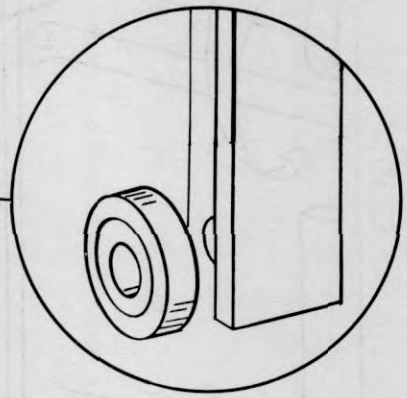

B. Inner rail rollers.

1. Count the number of shims at the right and left hand rollers.

2. Look at the three (3) numbers you recorded on the inner rail in Step 1. Go through the same steps you followed in adjusting the upper rollers.

3. If you end up with an extra shim here too, be sure it is on the same side as the extra upper shim.

C. Replace inner rail.

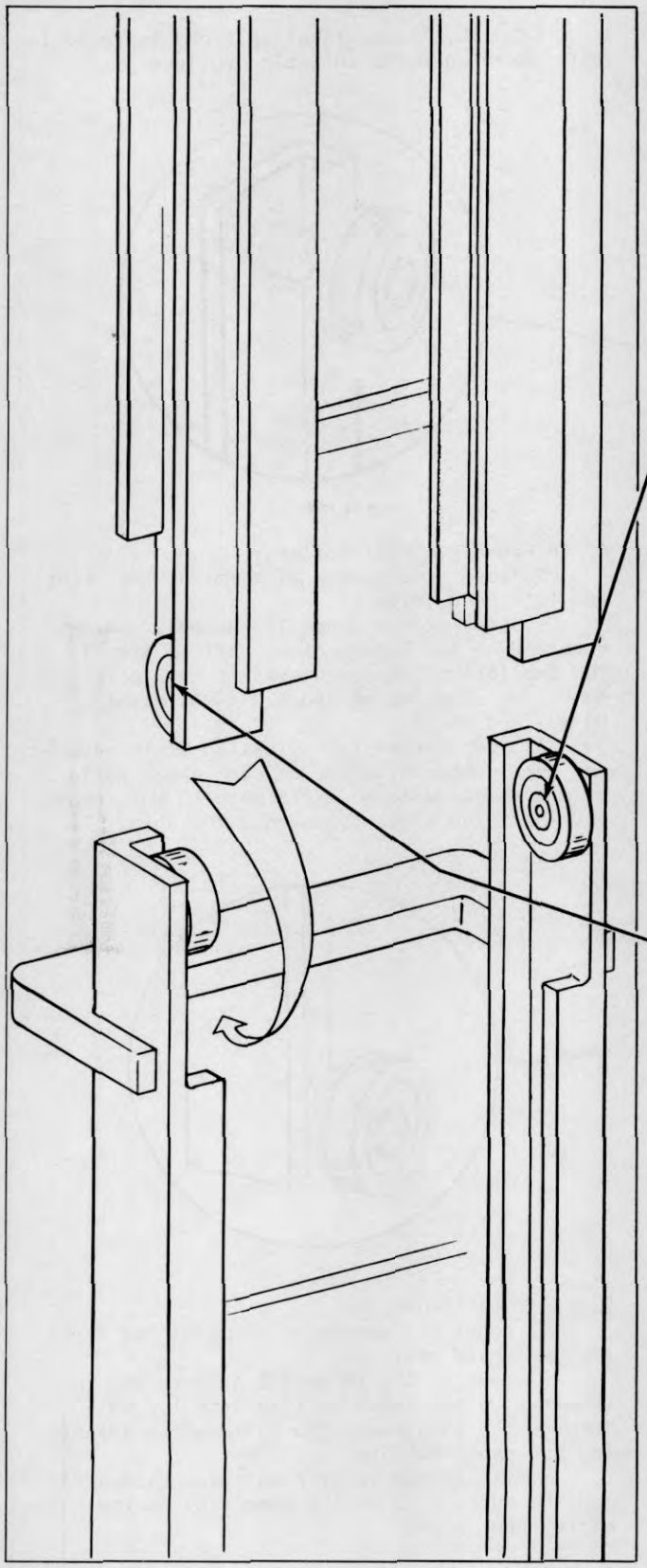

Step 11. Leave intermediate rail assem. in this position while adjusting rollers.

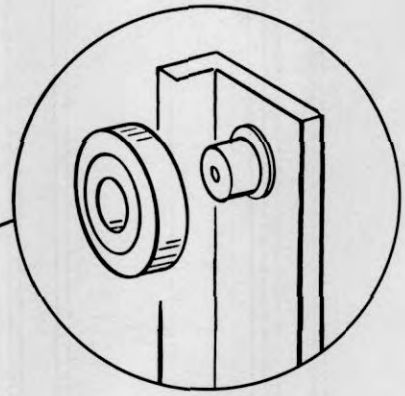

A. Outer rail rollers:

1. Count the number of shims at the right and left hand rollers.

2. Look at the three (3) numbers you recorded on the outer rial in Step 1. The smallest of these numbers is the total number of shims to be added. A "0" means DO NOT add shims.

3. Your target for adjustment is to have the same number of shims at each upper roller. If you end up with an extra shim DO NOT remove it. Mark the side having an extra shim.

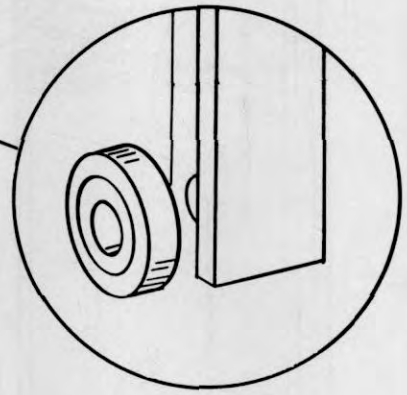

B. Intermediate rail rollers:

1. Count the number of shims at the right and left hand rollers.

2. Look at the three numbers you recorded on the intermediate rail in Step 1. Go through the same steps you followed in adjusting the upper rollers.

3. If you end up with an extra shim here too, be sure it is on the same side as the extra upper shim.

C. Replace intermediate rail assembly.

Plate 9655

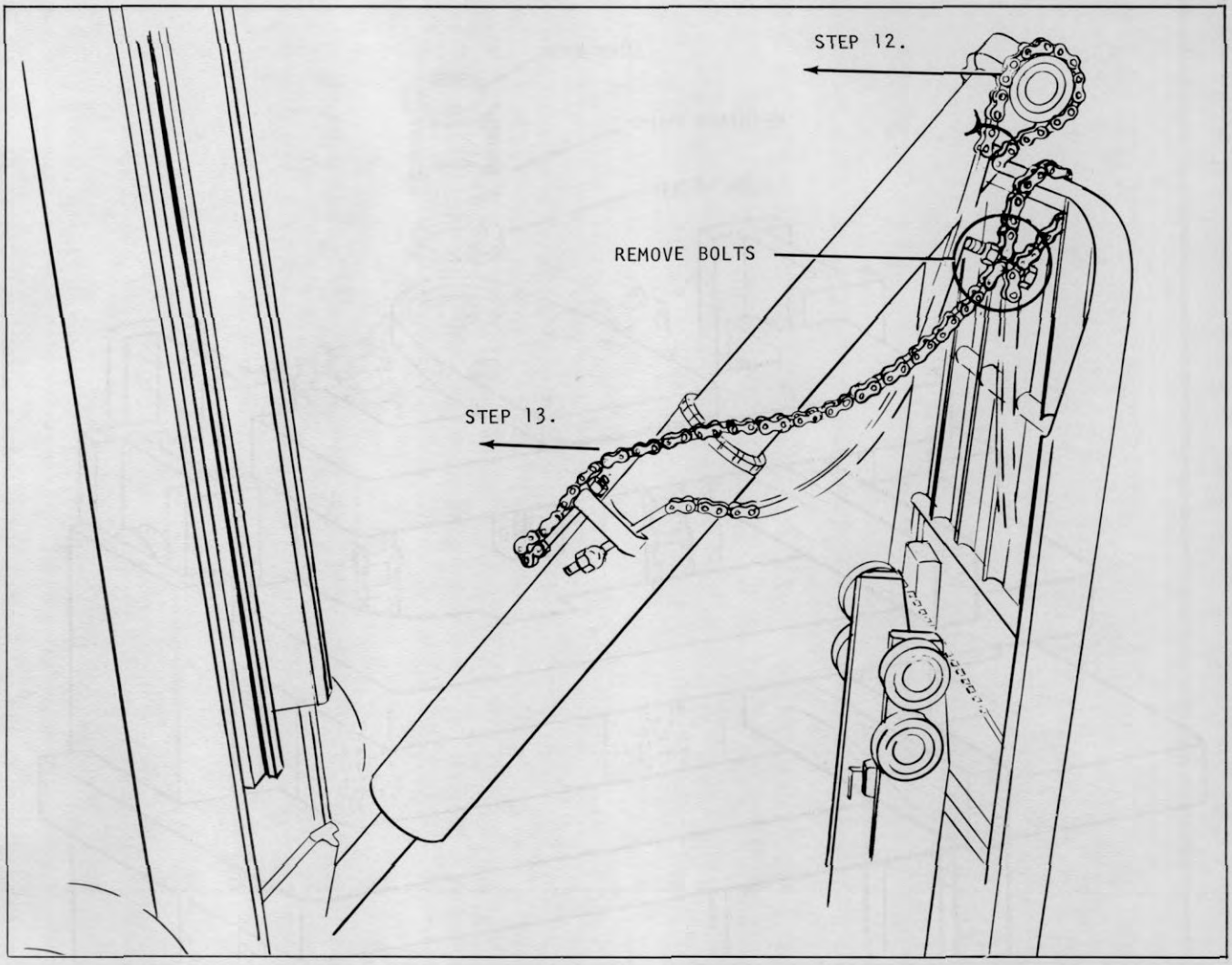

Plate 9656 Cylinder Replacement

Step 12. Using chain hoist, place cylinder back between rails.

N O T E

When installing cylinder watch position of cylinder line and tube, to prevent damage.

Step 13. Pull rear lift chains through back of upright.

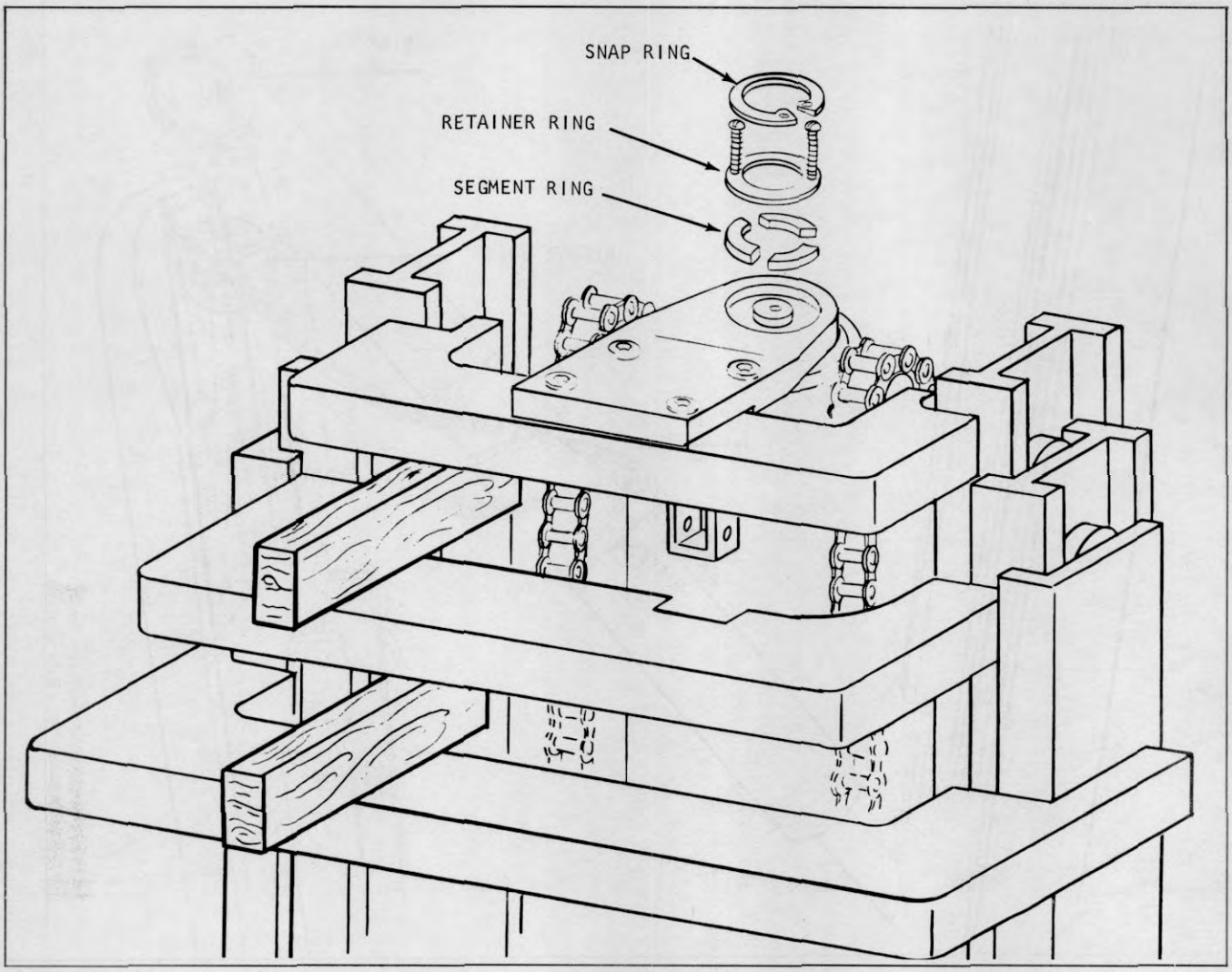

Plate 9657 Piston Head F.F.T.

Step 14(a). Install segment ring.

(b). Install retainer ring and remove both slotted machine screws.

(c). Install snap ring.

(d). Raise and lower to full positions checking piston and anchor. Remove blocks between tie bars.

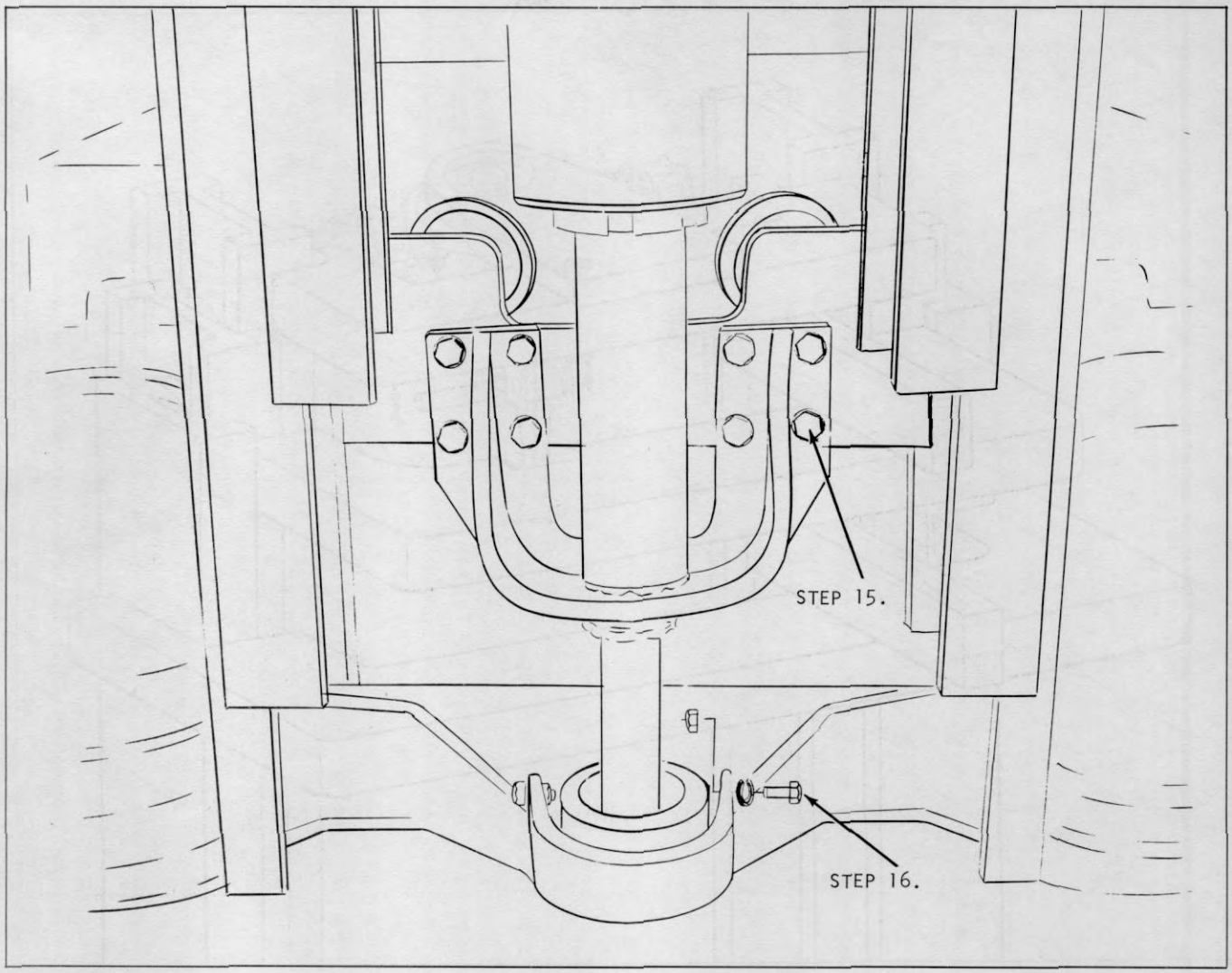

Plate 9658 Cylinder Lift Bracket

Step 15. Instll cylinder lifting bracket.

Step 16. Install lift cylinder support bolts.

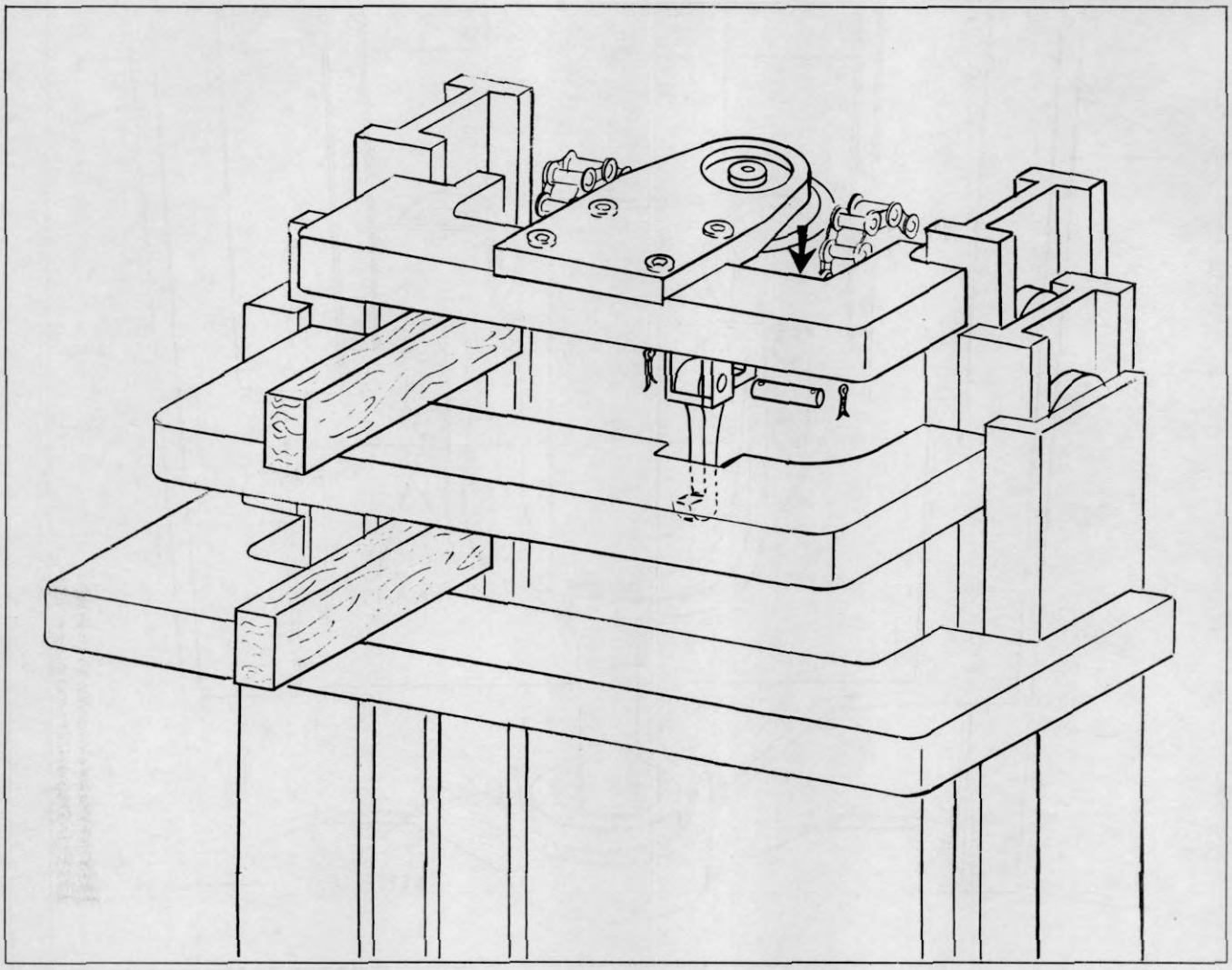

Plate 9659 Safety Stop

Step 17. Pull piston head down.

Install mechanical safety stop.

Replace cotter keys.

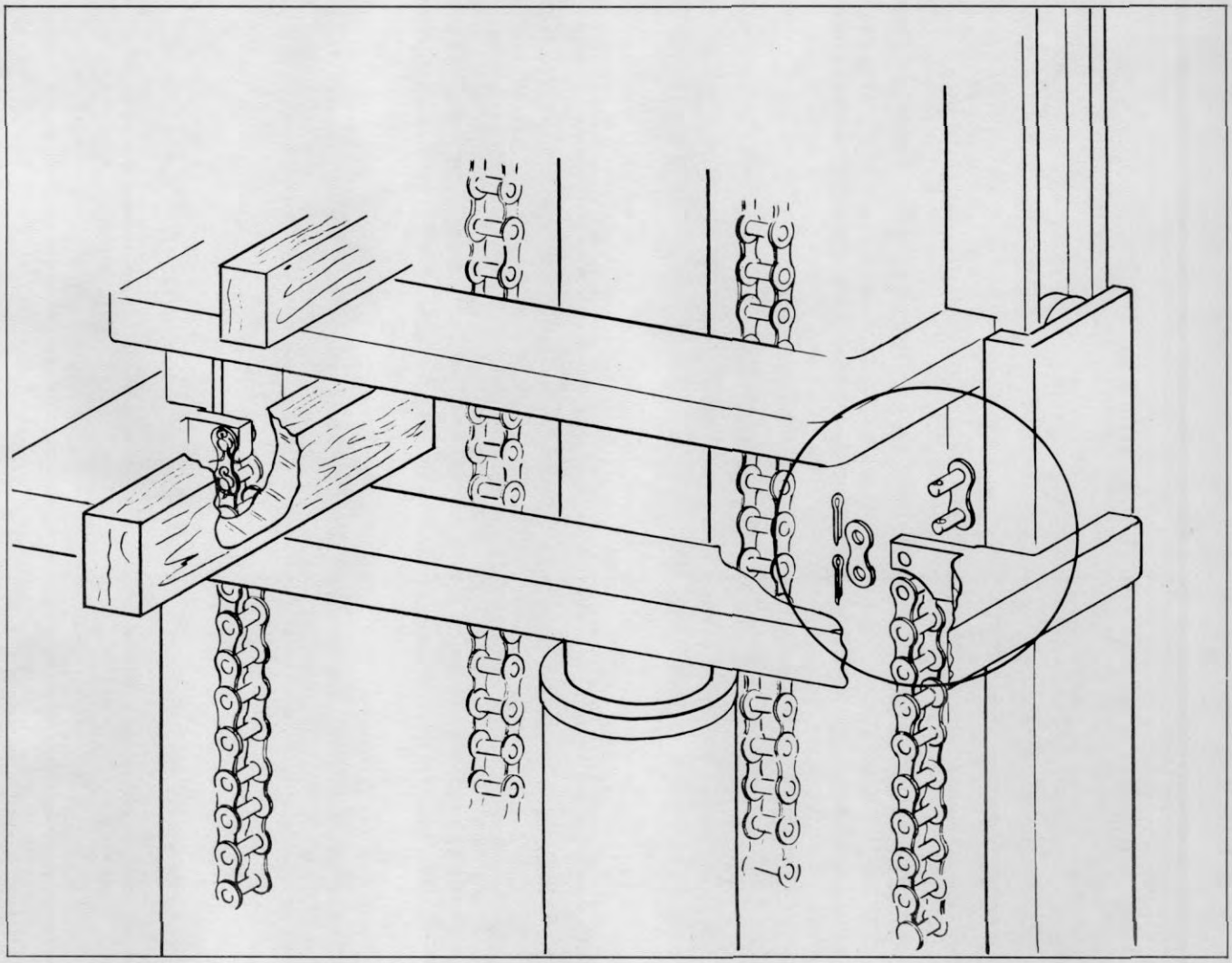

Plate 9660 Replacing Rear Lift Chains

Step 18. Install rear lift chains.

Check chain tension for adjustment. If adjustment is necessary besure to secure adjusting nuts before operating machine.

LIFT AND TILT CYLINDERS

Check for drift, leakage at packings, damage and security of mountings. (Anchor pivot pins, flanges and mounting rings).

LIFT CHAINS

The lift chains are mounted to the chain anchors on the lift carriage and at the chain anchor rods near the lift cylinder piston head.

If it becomes necessary to adjust the lift chains, proceed as follows:

W A R N I N G

KEEP CLEAR OF LOAD & CARRIAGE ADJUSTMENTS TO AVOID INJURY IF ANY MALFUNCTION SHOULD OCCUR AND CAUSE LOAD OR CARRIAGE TO FALL.

1. Elevate carriage to about 4 feet.

2. Smear grease on the innerslide channel as shown in Plate 8622.

3. Pick up a capacity load.

N O T E

It is important that the chain adjustment be made with a capacity load. In this manner you will allow for chain stretch.

4. Making sure uprights are either vertical or aft of vertical, lower load to the bottom.

5. Remove capacity load.

6. Raise carriage and measure the distance from where the center of the bottom carriage roller stopped, to the bottom edge of the inner slide. Distance must not be less than $\frac{1}{2}$".

LUBRICATE MACHINE

Lubricate all miscellaneous linkage with SAE 20 oil and all grease fittings with chassis grease. (Refer to Lubrication Chart.)

C A U T I O N

WHEN LUBRICATING MACHINE, INSPECT FOR LEAKING HYDRAULIC LINES, FITTINGS AND ELECTRICAL WIRING FOR DAMAGE.

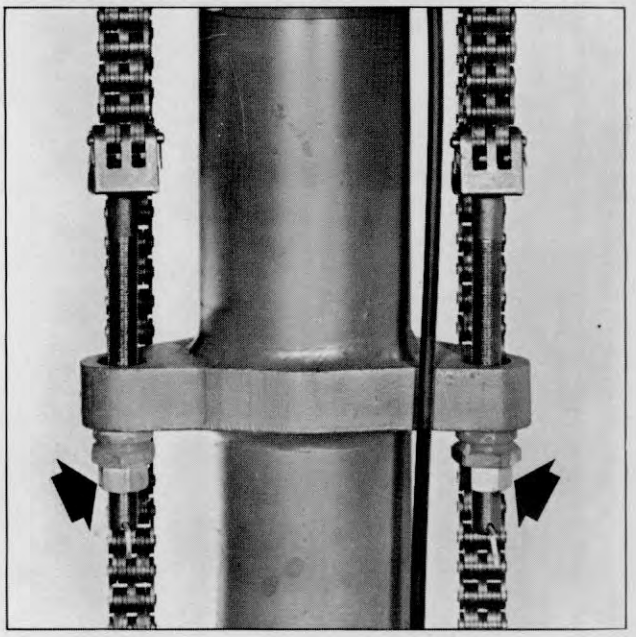

Plate 6634. Lift Chain Adjustment (Chain Anchor Rods)

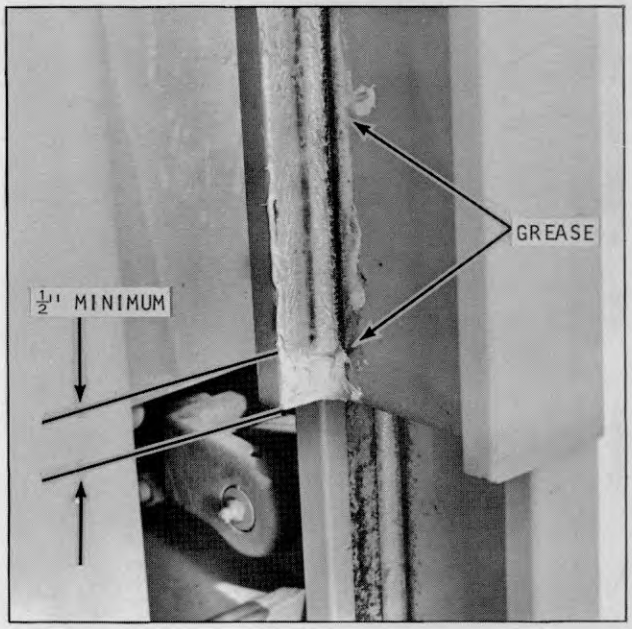

Plate 8622. Lift Chain Adjustment

INDUSTRIAL TRUCK DIVISION

TROUBLE SHOOTING GUIDE

DRIVE AXLE

TROUBLE	PROBABLE CAUSE	REMEDY
Continuous Axle Noise.	Badly worn parts.	Replace worn parts with new.
	Unevenly worn tires.	Replace tires.
	Improperly adjusted wheel bearing.	Adjust correctly.
	Lack of lubricant.	Add sufficient lubricant of correct grade.
Axle Noise on Drive or on Coast Only.	Differential pinion gear and ring gear out of adjustment or worn excessively.	Adjust, repair or replace entire unit if conditions warrants.
Excessive Backlash in Axle Driving.	Loose axle shaft drive flange cap screws.	Tighten cap screws.
	Flange loose on axle shaft.	Reweld flange to shaft.
	Worn splines on axle shaft at differential end.	Replace drive flange and shaft assembly.
	Differential drive pinion gear and ring gear out of adjustment or worn excessively.	Adjust or replace as condition warrants.
Complete Failure to Function.	Broken axle shaft.	Replace axle shaft.
	Broken teeth on ring gear or pinion gear.	Replace ring gear and pinion and other parts of differential necessary. Adjust ring gear and pinion gear correctly.

STEERING AXLE

TROUBLE	PROBABLE CAUSE	REMEDY
Trouble.	Damaged axle.	Replace axle.
	Lubrication leaks.	Replace oil seals. (Refer to Lubrication Section). Report to designated individual in authority.
	Incorrect caster or camber.	Report to designated individual in authority.
	Uneven tire wear.	Inflate tires properly. Check wheel alignment.

BRAKES

TROUBLE	PROBABLE CAUSE	REMEDY
Brakes drag.	Improper pedal adjustment.	Adjust brake pedal free travel.
	Brake pedal return spring broken or weak.	Replace spring.
	Brakes improperly adjusted.	Adjust brakes.
	Brake shoe anchor pin tight in shoe.	Free-up pin and lubricate lightly.
	Brake shoe return spring broken or weak.	Replace spring.
	Loose or damaged wheel bearings.	Adjust or replace wheel bearings.
	Insufficient brake shoe clearance, or improper brake anchor pin adjustment.	Adjust brakes.
	Brake backing plate loose.	Tighten plate.
	Grease on linings.	Correct grease leakage; clean or install new shoes and lining assemblies.
	Dirt imbedded in lining.	Clean lining with wire brush.
	Drums scored or rough.	Replace drum and brake shoe and lining assemblies.
Severe brake action on light pedal pressure.	Brake shoes improperly adjusted.	Adjust brakes.
	Grease on linings.	Correct grease leakage; clean or install new shoes and lining assemblies.
	Loose brake shoe anchor.	Adjust and tighten.
Brake locked.	Brake pedal lacks free travel.	Adjust pedal free travel.
	Brakes frozen to drums (cold weather).	Break loose by driving vehicle.
Brake noisy or chatters.	Brake lining worn.	Replace shoe and lining assemblies.
	Grease on linings.	Correct leakage; clean or replace shoe and lining assemblies.
	Dirt embedded in linings.	Clean lining with wire brush.
	Improper or loose linings.	Replace shoe and lining assemblies.
	Brake shoe or drum distorted.	Straighten or replace.

BRAKES (Continued)

TROUBLE	PROBABLE CAUSE	REMEDY
Excessive pedal travel.	Lining worn.	Adjust or replace shoe and lining assemblies.
	Brake improperly adjusted.	Adjust brake.
	Scored brake drums.	Repair or replace drums.
Excessive pedal pressure.	Grease on linings; worn or glazed lining.	Correct grease leakage; clean up and replace shoe and lining assemblies.
	Warped brake shoes, or defective brake linings.	Replace shoe and lining assemblies.
	Shoes improperly adjusted.	Adjust brakes.
	Brake drum scored or distorted.	Repair or replace drums.
	Shoes improperly adjusted.	Adjust brakes.
	Insufficient fluid in master cylinder.	Fill master cylinder to within 1/4 inch of the top.
Wheel troubles.	Wheel wobbles; bent.	Inspect mounting on hub, spindles, and drive axle; replace defective wheel or mounting.
	Wheel loose on hub.	Tighten.
	Wheel out of balance.	Balance wheel.
	Wheel bearings run hot.	Adjust, lubricate wheel bearings.

INDUSTRIAL TRUCK DIVISION

TROUBLE SHOOTING GUIDE

HYDRAULIC SYSTEM

TROUBLE	PROBABLE CAUSE	REMEDY
Pump not delivering oil.	Wrong direction of rotation.	Must be reversed immediately to prevent seizure and breakage of parts due to lack of oil.
	Tank oil level low.	Add recommended oil.
	Oil intake pipe or suction filter plugged.	Replace filter cartridge, clean strainer if so equipped.
	Air leak in suction line.	Will prevent priming, or cause noise and irregular action of control circuit.
	Oil viscosity too heavy to pick up prime.	Thinner oil should be used, per recommendations for given perature and service.
	Broken pump shaft or gear.	Report to designated individual in authority.
Pump not developing pressure.	Pump not delivering oil for any of the above reasons.	Check oil circulation by watching oil in tank.
	Relief valve setting not high enough.	Refer to relief valve instructions.
	Relief valve sticking open.	Dirt under pressure adjustment valve. Refer relief valve instructions.
	Leak in hydraulic control system (cylinders or valves).	Find leak and correct.
	Partially clogged intake line, intake filter or restricted intake pipe.	Pump must receive intake oil freely or cavitation will take place.
Pump making noise.	Small air leak at pump intake piping joints.	Test by pouring oil on joints while listening for change in operation. Tighten as required.
	Air leak at pump shaft packing.	Repair or replace.
	Tank air vent plugged.	Must be open thru breather opening or air filter.
	Too high oil viscosity.	Use recommended oils.
	Shaft packing worn.	Replace shaft packing per preceding instructions.
	Oil filter dirty.	Replace filter element.
Forks do not lift to maximum height.	Hydraulic Oil level low.	Fill sump tank.

HYDRAULIC SYSTEM CONTINUED

TROUBLE	PROBABLE CAUSE	REMEDY
Lift or tilt action fails.	Loss of oil pressure.	Report to designated individual in authority.
Oil leak at top of lift cylinder assembly.	Worn or damaged lift piston seal.	Replace seal.
	Scored cylinder wall.	Replace cylinder.
	Plugged vent line.	Clean out vent line. Replace if collapsed.
Oil leak around piston rod at tilt cylinder.	Worn seal.	Replace seal.
	Scored piston rod.	Replace rod and eliminate cause of scoring which may be caused by misalignment, worn bearing or foreign matter.
With load centered on lift forks load is lifted unevenly.	Lift chains out of adjustment.	Adjust chains.

INDUSTRIAL TRUCK DIVISION

EC 50-60-70 SG

GE C-290

SUBJECT: PROPER SCR CHECK OUT PROCEDURE FOR GE C-290 SYSTEM; EC 50-60-70 SG.
IMPORTANT: Machines must be thoroughly checked before being put into service.

The attached CHECK OUT SHEET must be filled out and has to accompany the installation report before we will accept any warranty claims.

DO NOT use a motor generator unit such as Ready Power to move and/or check machines as serious damage may occur.

If, for any reason, a machine does not comply with the adjustment, inspection and test procedures, the figures you enter on the check out sheet will have to be known prior to contacting the factory.

The following checks MUST be made with a Simpson V-O-M 260 Meter or equivalent.

NOTE: IF METER READINGS ARE NOT WITHIN SPECIFICATIONS OF EACH STEP, REFER TO ADDITIONAL TROUBLESHOOTING INSTRUCTIONS FOLLOWING THE CHECK OUT PROCEDURE. DO NOT CONNECT BATTERY UNTIL STEP 7.

1. CHECKING BATTERY POLARITY & BATTERY VOLTAGE.

With voltmeter set on the 50 V DC (+) scale, place the red lead on positive (+) and the black lead on negative (—) battery connector. You should read battery volts. If meter needle moves backwards, the power cables are connected wrong in the battery and should be reversed before connecting battery to machine.

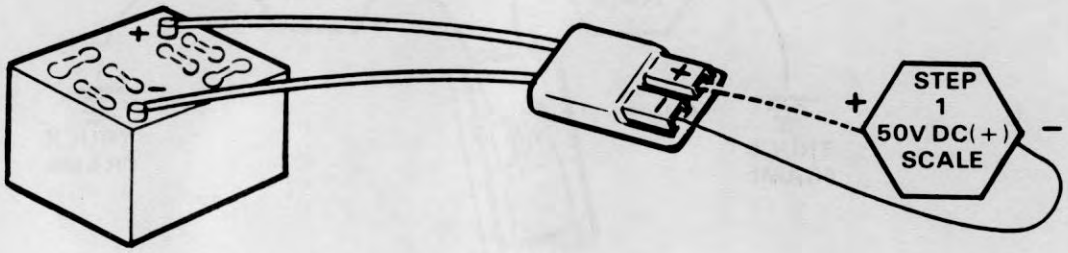

2. CHECKING TRUCK POLARITY. Checking continuity of power cables for proper polarity.

a. With ohmmeter on RX1 scale, either lead red or black on the positive side of truck battery receptacle, the other lead on the 2FU fuse. Should have no resistance. Ohms.

b. Still on the RX1 scale, either lead red or black on the negative side of truck battery receptacle, the other lead on the movable pump contactor power tip, should have no resistance. Ohms.

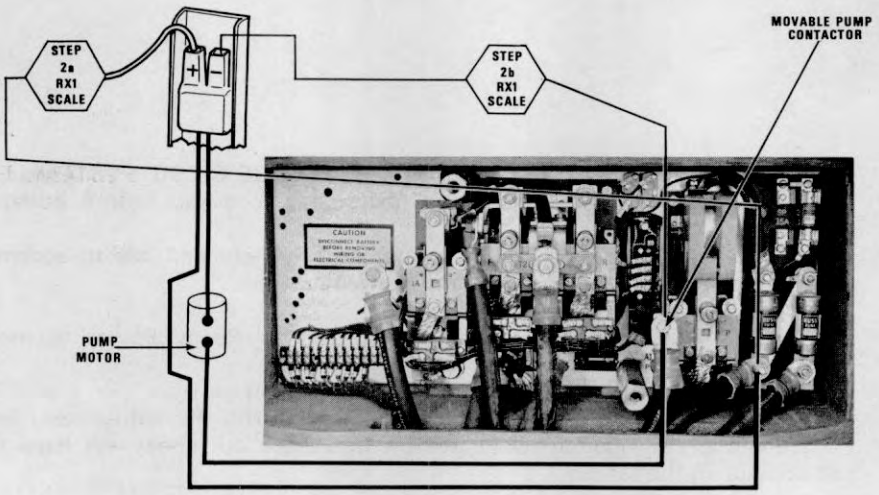

3. GROUND TEST.

With ohmmeter set on RX 10,000 ohm scale, check for grounds.

a. Positive (+) of truck receptacle to truck frame.

b. Negative of truck receptacle to truck frame, with 1A contactor held closed.

Resistance for 3a and 3b should be 50,000 ohms or higher on new trucks, 30,000 ohms is acceptable on used trucks.

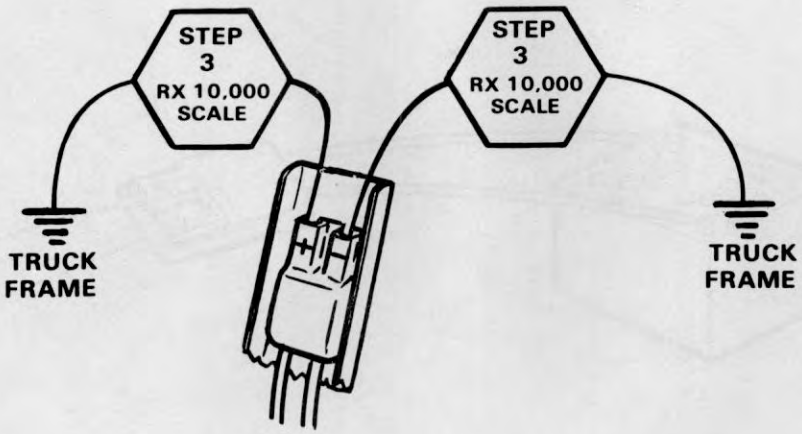

4. CONTROL WIRING: (Battery Disconnected) Check Control Wiring Using Ohmmeter.

a. With all switches open, measure 1500 ohm (to infinity) between wires 12 (+)(15 amp fuse) and 16.

b. Close key switch, seat switch, accelerator (1MS) and move directional switch to forward and measure 30 or more ohms between wires 12 (+)(15 amp fuse) and 16.

(R x 1 scale). Remove back-up light wire (if used) at rev. contactor. Repeat above, check with the direction switch in rev.

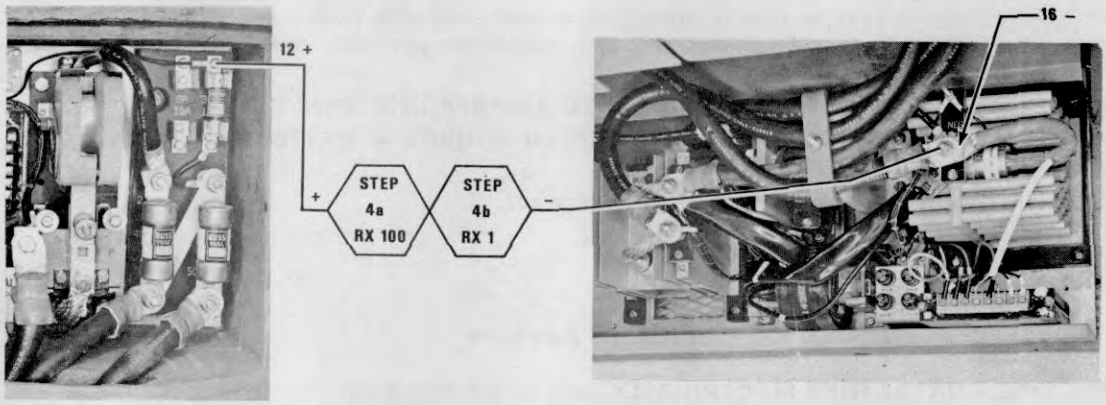

5. CHECKING SPEED POT, 1MS & 2MS SWITCHETTE OPERATION.

a. Disconnect wire 37 from terminal 3 card 1, connect ohmmeter (RX 100) on wire 37 and wire 16. Depress accelerator pedal until 1MS clicks, meter at the click should read between 2000 and 5000 ohms.

NOTE: Higher resistance allows slower creep speed, set 1MS to highest resistance possible.

b. With ohmmeter still connected on wire 37 and 16, RX 100 scale, depress accelerator completely, 2MS switch should click, at this point meter should read 400 ohms or less when the 2MS switch clicks.

c. Remove meter and reconnect wire 37 to terminal 3 on card 1.

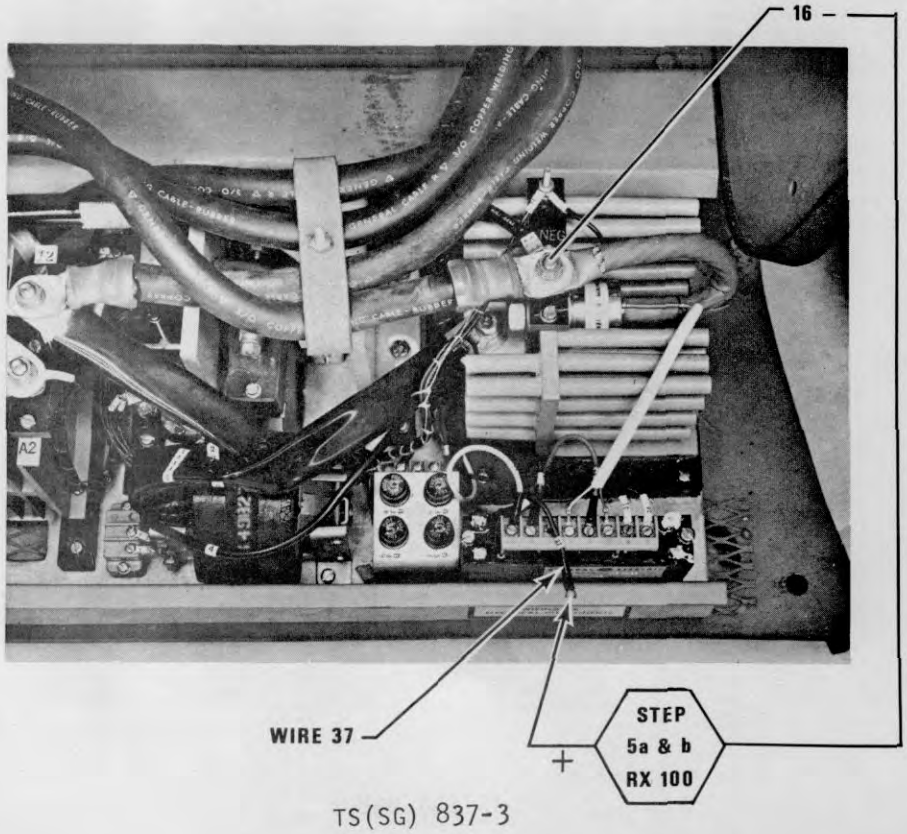

6. CHECKING CONTACTORS MANUALLY.

Before connecting battery, manually push the armature plate in until power tips contact and wipe. NOTE: Interlocking switchette should not actuate until after power tips make contact. This check is performed to detect contactor binding, switchette operation and wire interference with contactor tips.

THE BATTERY SHOULD BE FULLY CHARGED AND SPECIFIC GRAVITY 1.250 OR HIGHER.

CAUTION: DO NOT USE ANY OTHER POWER SOURCE — BATTERY ONLY AND WITH NO POWER CABLE EXTENSIONS.

NOTE: If fault detector is used, jump 2X and 2Y wires.

CONNECT BATTERY

7. CHECKING CONTACTORS ELECTRICALLY. Key on and seat down.

a. Insert insulated material (cardboard, etc.) between the normally open power tips of contactors to prevent current flow. Move the F & R directional lever in forward, depress the accelerator until the forward contactor closes, depress the accelerator completely until the 1A contactor closes. The same applies for reverse. With F contactor closed, depress R contactor armature plate and F coil should drop out and vice versa. This is an interlocking switchette check.

NOTE: FW (Field Weakening) contactor (if used), should not engage. This will be covered on a separate sheet.

b. With insulator between pump contactor power tips to prevent current flow; operate the lift and tilt lever to see if pump contactor coil operates properly.

NOTE: Remove jumper from 2X and 2Y wires.

8. CREEP SPEED ADJUSTMENT

a. Remove insulator from F&R contactors. With front wheels jacked up and insulator in power tips of 1A &FW contactors and jumper wire around thermal cut-back (1 REC heat lead #35). With accelerator pedal fully depressed stall the motor by depressing the brake pedal. Adjust creep speed on card #1 (80 to 90 ampheres line current). Remove jumper wire. Above adjustment should give proper creep speed with truck operating on floor and will simulate a thermal cut-back condition.

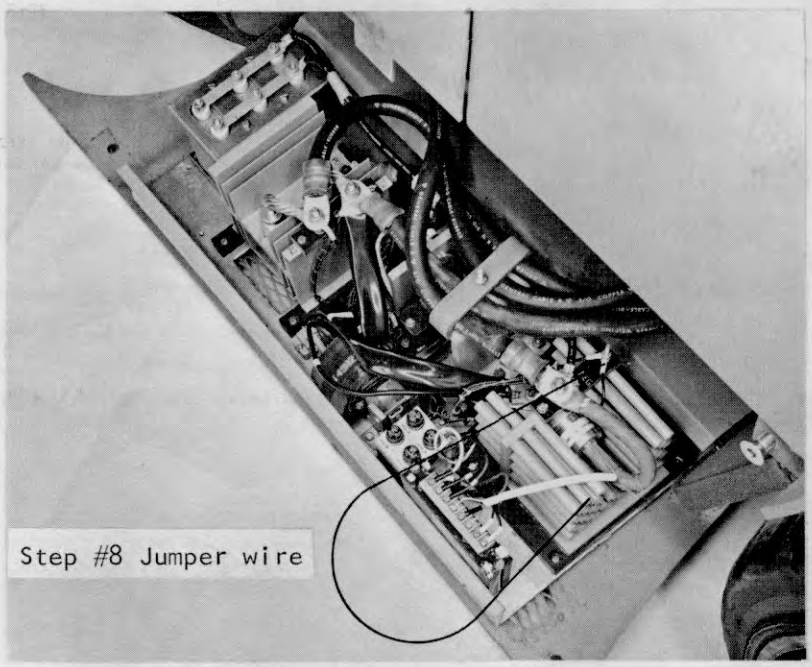

WITH DRIVE WHEELS JACKED UP AND INSULATOR IN POWER TIP GAPS OF 1A AND FW CONTACTORS, CHECK MAXIMUM SPEED VOLTAGE AND CURRENT LIMIT. THESE ADJUSTMENTS HAVE BEEN PRESET AT THE FACTORY AND SHOULD NOT REQUIRE ADJUSTMENT.

9. CHECKING SPEED VOLTAGE AND CURRENT LIMIT.

NOTE: DO NOT STALL MOTOR FOR MORE THAN 30 SECONDS AT A TIME. ALLOW TIME FOR MOTOR COOLING BETWEEN STALLS. DO NOT OPERATE MOTOR AT HIGH SPEEDS OR REVERSE DRIVE MOTOR WITH DRIVE WHEELS JACKED UP.

Equipment required:

1. Volt Ohmmeter, Simpson 260-5P or equivalent.
2. Clark ammeter part #1800979 or 50 MV 600 amp shunt and 50 MV 600 ammeter.

a. Disconnect the positive power cable from 2FU and connect the ammeter (or shunt) between the power cable and the 2FU.

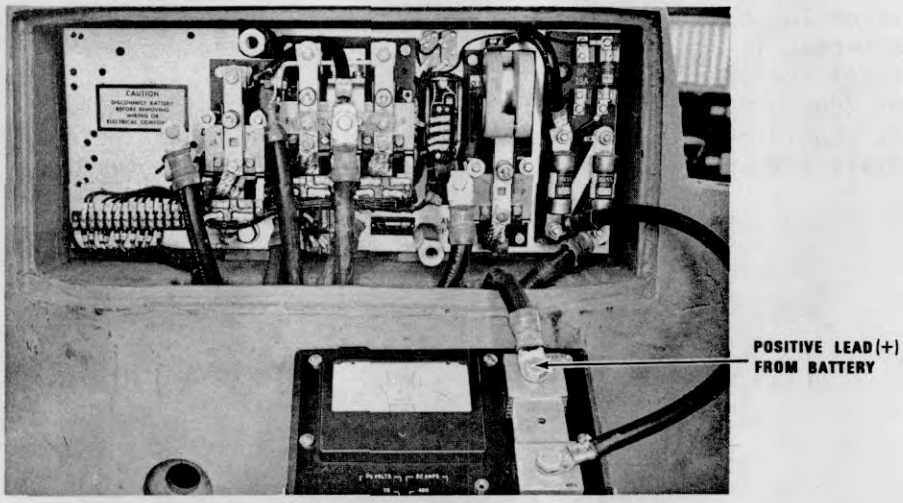

b. Connect the volt meter (50V DC + scale) between the positive terminal (A1(3 and 4 REC heat sink) and T2 on the SCR panel.

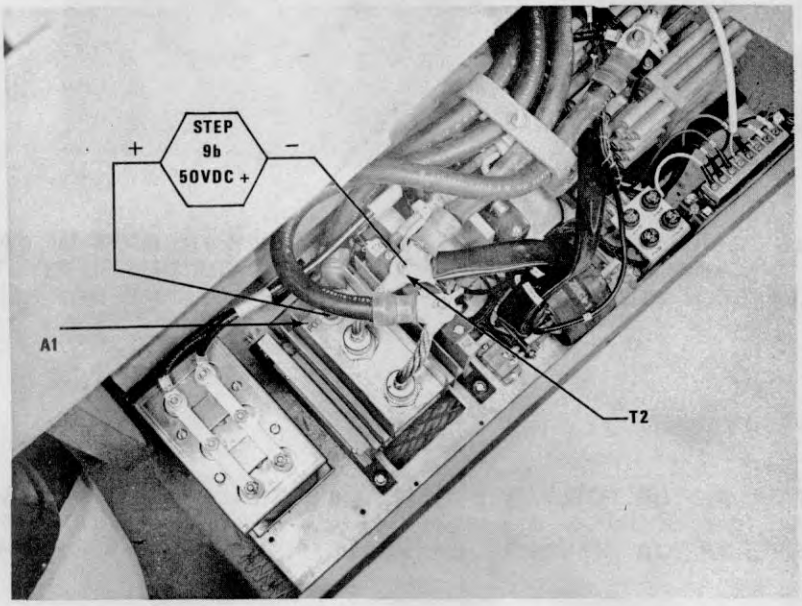

c. Check maximum speed voltage first by depressing the accelerator completely and applying the brakes until battery current is 120 amperes. Voltmeter at this point should read between 25 - 27 volts. If not, adjust maximum speed voltage on card 1, trim pot located on the upper right hand corner, clockwise to increase.

d. Now check current limit by locking drive wheels with brakes, depress accelerator completely, current should read 290 amps minimum — 310 amps maximum. If not, adjust current limit potentiometer on Card #1 located in the lower right hand corner — clockwise to increase.

10. On trucks equipped with field weakening kit unblock all contactors. With wheels jacked up, check FW contactor for pick-up and drop-out at correct values of current. Stall the motor by depressing the brake pedal, release brake pedal until pick-up occurs and then depress brake pedal until drop-out occurs. **(Pick up 225 - 250 - drop out 500 - 550).**

11. **OPERATION:** With wheels on the ground, give truck a general operational check out, including plugging from various speeds. Adjust plugging distance with trimpot on Card #1 as desired (CW to decrease distance).

TABLE 1

Failures Which Cause No Motor Torque With SCR Control

SYMPTOMS	WHAT TO DO
1A. Zero volts from control positive to control negative.	• Check 1 FU and 3 FU to see of they are blown. • Check the key switch for misoperation. • Check battery for low specific gravity and connections for looseness or broken fittings.
1B. Contactors (F or R) do not pick up. Battery volts from control positive to control negative.	• The problem may be an open circuit from control positive to F or R coils, including misoperation of the seat switch, brake switch, start switch, directional switch or normally-closed F or R interlocks. • Check 7 and 8 REC for short circuits (See Table 4-F).
1C. Contactors close (F or R). No power and no SCR hum with accelerator in SCR range.	• With the accelerator in operating range, 1A blocked open, and contactors F or R picked up, check for control volts between terminal 2 Card 1 and negative. If there is zero volts at this point, check F and R interlocks for open circuit. • Check for battery volts between terminals (1) and (6) on Card 1. If voltage is not present, check the power contact tips of F and R and the continuity of wire 41 from T1 to Card 1 (1) and from Card 1 (6) to battery negative. • Check for about one third of control volts between Card 1 terminals 3 and 6 (except near high-speed position of accelerator). If near zero or about half or more of control volts (except near high-speed position of accelerator when the volts will rise to control volts), the potentiometer (and/or contacts) in the accelerator may be defective (See Table 4-I), or Card 1 may be defective (See Table 4-A). • Check for open circuit from Card 1 terminal 4 thru 1 REC gate (white lead). (See Table 4-G). • Check 1 REC for open gate (See Table 4-G). • Check oscillator section of Card 1 (See Table 4-A).
1D. Contactors close (F or R). Very little power and high-pitch SCR hum.	• Check 2 REC for a short in the conducting direction (See Table 4-G).
1E. Contactors close (F or R). Normal hum but little or no torque.	• Check for short in 3 and 4 REC (See Table 4-E).

TABLE 2

Failures Which Cause Full Motor Torque With SCR Control

SYMPTOMS	WHAT TO DO
2A. Contactors close (F or R). Full SCR speed immediately. Audible hum.	• Check for short from negative to terminal 3 of Card 1. • Check potentiometer for proper resistance (See Table 4-I).
2B. Contactors close (F or R). Full speed immediately. No audible hum.	• Check for 1A contactor failure to open, or short in truck wiring, or malfunction of Card 3 causing 1A to pick up immediately. (See Table 4-B).
2C. Contactors close (F or R). Full speed immediately. No audible hum. Capacitor 1C not charged when measured within 30 minutes after operation of truck.	• Check 1 REC for a short (See Table 4-G). • Check for open in 5 REC gate circuit from negative through 9 RES to 5 REC. • Check 9 RES (See Table 4-H). • Check 5 REC for open gate (See Table 4-G). • Check continuity of wires from 1C to 5 REC and from 5 REC through T3, T4 to T1 at the 1 REC anode. • Check for shorts in capacitor 1C (See Table 4-C).
2D. Contactors close (F or R). Full speed immediately. No audible hum. Capacitor 1C charged, i.e., volts from battery negative (positive on voltmeter) to 5 REC anode wire 34 is more than 30 volts.	• Check for open in 2 REC gate circuit from T3 through 8 RES to 2 REC. • Check 8 RES (See Table 4-H). • Check 2 REC (See Table 4-G).

TABLE 3

Misoperation of Special Features

SYMPTOMS	WHAT TO DO
3A. Failure of 1A contactor to operate.	• Check voltage between terminals 1 and 2 of Card 3 (When F contactor is closed) to be control volts. If voltage is not present check for open in wiring from positive to Card 3 terminal 1. Also check for open from terminal 2 - Card 3 through 1A switch on accelerator, to control negative. • Check voltage between terminals 3 and 2 of Card 3 to be battery volts after time delay. If voltage is present, check for open circuit in the 1A coil. (See Table 4D). • Check Card 3 (See Table 4-B).

3F. Severe reversal.	• Adjust static-plug trimpot on Card 1, turning the pot counterclockwise for softer plug. • Check 4 REC (See Table 4-E). • Check current limit (See Table 5).
3G. Severe reversal. (Deceleration smooth but severe as vehicle changes direction).	• Check adjustment and operation of timer card. (See Table 4B).
3H. Reversal too soft.	• Check static-plug trimpot on Card 1 (Adj. clockwise to stiffen plug).

TABLE 4

Checking Components

4A. CARD 1
Tune up card per Table 6. If these adjustments cannot be made or if control fails to operate satisfactorily, check all other components. If all check good, replace card with a known operating card.

4B. CARD 3 (1A Timer)
Disconnect leads to Card 3. Connect a voltmeter (50V scale on 36 volt battery or 250V scale on 72 volt battery) from terminal 3 to 2. Apply battery volts negative to terminal 2 and positive to terminal 1. The voltmeter should read about one volt and then raise to battery volts at the end of the timer interval, .3 to 2.5 seconds. Turning trimpot should adjust time (CW to increase). Remove battery volts and voltmeter should drop to zero.

4C. CAPACITOR 1C
Disconnect battery and discharge capacitor. Remove wire No. 34 from all capacitors. Measure ohms through each capacitor using the RX10,000 scale. Meter should read zero ohms and then swing to above 100,000 ohms. If not, replace capacitors.

NOTE: Control is arranged so that F and R do not break current. Contactor 1A drops out ahead of F or R.

4E. RECTIFIERS
When checking diodes, **disconnect battery and discharge capacitor 1C** to prevent burning out the ohmmeter. When reassembling hardware on rectifiers, refer to Table 5 for proper torque settings.

To check 3, 4, 15 and 16 REC, disconnect one side of the rectifier. These are diodes with about 7 to 12 ohms in the conducting direction (+ ▶ −) measured with scale RX1, and infinite resistance in the non-conducting direction (− ▶ +) measured with scale RX10,000. (On some meters about 75 to 160 ohms are obtained in the conducting direction.)

4F. CONTACTOR COIL AND ACCESSORY FILTERS
(7, 8, & 9 REC) (Typical Cat. No. 148B6203G14)
These are varistors and should be checked as follows: Disconnect battery and discharge capacitor 1C. Disconnect the leads to the filter block. Connect a 36-volt d-c test battery in series with the varistor and a volt-ohmmeter set on the 1 ma. scale as shown in Figure 8. If the varistor is good, there will be a noticeable deflection of the meter needle when the leads are touched to the filter block terminals. If no deflection is obtained replace the filter block.

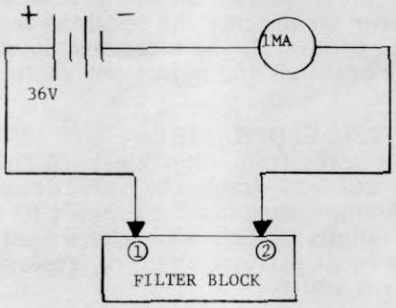

Fig. 8

4G. See page number TS(SG) 849.

4H. GATE CONTROL (8 RES, 9 RES)
8 and 9 RES act like a diode with high resistance in the conducting direction.
To check, disconnect the lead from terminal 2 to the gate. Using a test battery, 220-ohm resistor and voltmeter as in Figure 9; the voltmeter should read about 22 volts when the voltmeter is connected to terminal 1 (positive) and terminal 2 (negative). Reverse voltmeter leads (terminal 2 negative), voltmeter should read battery volts.

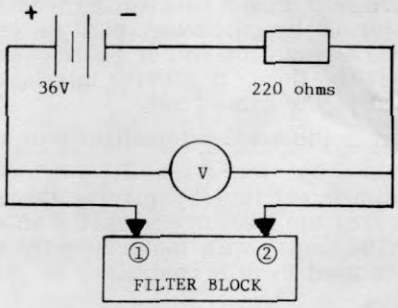

Fig. 9

4I. ACCELERATOR POTENTIOMETER—
Check procedure: Disconnect pot from circuit by removing wire 37 from card 1 terminal 3. Measure resistance of pot on RX100 scale between wire 37 and negative wire 16 (wire 56 terminal 3 of 21 RES if thermostat is used—refer to Figure 7). Resistance should read approximately 5000 ohms and smoothly reduce to zero as the foot-pedal is depressed to maximum travel.
Adjustment: To set potentiometer resistance, as the foot-pedal is depressed from off towards maximum travel, the resistance should be 3500 ohms or higher as the start switchette operates. As you continue to depress the pedal the resistance should be less than 300 ohms when the 1A switchette operates. If the resistance does not read as above, loosen the screw clamping the gear to the pot shaft and adjust pot shaft position until above reading is obtained.

4J. SEMI-CONDUCTOR FILTER BLOCKS (F1)
To check, disconnect all wires from filter block. With the VOM on RX10,000 scale—touch the leads to terminals 1 and 5 to charge the filter. Reverse the meter leads touching them to terminals 5 and 1. A strong capacitor action should be observed (i.e., the VOM needle will deflect and return to infinity). This same check must be applied to terminals 2 and 6, and 3 and 7. If this capacitor action is not observed, replace filter block. NOTE: There is no filter between terminals 4 and 8.

4K. TRANSFORMER SECONDARY FILTER (12 RES)
12 RES acts like a diode with high resistance in the conducting direction. To check, disconnect the leads from terminals 1 and 2. Using a test battery, 220-ohm resistor and voltmeter as in 4H, the voltmeter should read about 31 volts when the voltmeter is connected to terminal 1 (positive) and terminal 2 (negative). Reverse voltmeter leads (terminal 2 negative), voltmeter should read battery volts.

4L. SEMI-CONDUCTOR FILTER BLOCK (SF)
To check, disconnect all wires from filter block. With VOM on RX10,000 scale, touch the leads to the filter terminals to charge the filter. After a few seconds, reverse the meter leads and touch the filter terminals. The VOM needle will deflect and return to infinity. If this capacitor action is not observed, replace the filter block.

Table 5

Checking Current-Limit

5A. The current-limit circuit has been preset at the factory and should not be adjusted. However, if truck operation appears sluggish or if control appears to be overheated, the following check should be made.

Material required to check current-limit:

500-ampere 50-millivolt d-c shunt

50-millivolt d-c meter (d'Arsonval movement)

50-volt d-c meter (d'Arsonval movement) (250-volt scale needed for 72V)

Battery with equal or greater ampere-hour capacity used on truck, charged to 1200 or higher specific gravity.

Check that ohms in accelerator potentiometer are under 300 ohms in high speed (See Table 4-I).

Connect the shunt and millivolt meter between battery negative and 1 REC. Connect the voltmeter across the motor (between battery positive and T2 on the SCR panel). Disconnect the positive lead of 1A contactor coil or block power tips of 1A contactor open. Jack the wheels of the truck off the floor. If a brake interlock is used, short it out so that power and brakes can be applied at the same time.

Connect battery and depress the accelerator slightly to assure that a positive deflection of the meters are obtained.

Check maximum speed adjustment first by moving the accelerator to the full-power position and applying the brakes until battery current is about 70-80 percent of the loaded level amperes (approximately 100 amps) with motor directly across the battery and motor fields connected the same as are used in SCR control.

Voltmeter should read between the following:

Battery Volts	*Motor Volts*
36	25-30
48	35-40
72	50-60

Now, check current-limit by moving the accelerator to the full-power position and applying the brakes until the wheels come to a standstill or until the meter reads 300 amperes, plus or minus 15 amperes (full scale is 500 amperes).

NOTE: Do not stall the motor for more than 30 seconds at a time. Allow time for motor cooling between stalls. Do not operate motor at high speeds or plug the motor with wheels jacked up.

5B. If the current-limit is not properly set, refer to the truck manufacturer.
If either adjustment has to be altered, recheck maximum speed and current-limit until both limits are met. The maximum speed adjustment has a slight effect on current-limit. The current-limit adjustment has a slight effect on high speed. Both adjustments are CW to increase.

5C. Torques for Rectifiers*

a) 1 REC (C290)	300 inch-pounds, or	24 foot-pounds
b) 2 and 5 REC (C50)	150 inch-pounds, or	12 foot-pounds
c) 3 and 4 REC	300 inch-pounds, or	24 foot-pounds

* Values given are nominal, limits are plus-or-minus 50%.

NOTE: Silicon grease (Penatrox A) should always be applied between rectifier and heat-sink before tightening rectifier hardware.

Table 6

Tuneup for New or Mistuned Card 1

Panels are factory adjusted for a particular motor and truck and should not need adjustment when used with this motor and truck. If minor adjustments are required for optimum performance they may be made without regard to the following procedure because the adjustments are so designed that they do not interact when near their proper setting.

If the panels are used to control motors or trucks for which they were not factory adjusted, the settings may be out of optimum adjustment to the extent that they do interact and the following procedure must be followed:

(1) Turn current-limit adjustment fully clockwise.
(2) Turn static-plugging adjustment fully clockwise.
These two steps prevent any interaction when setting the speed adjustments.
(3) Adjust creep-speed as desired.
(4) Adjust top SCR speed per Table 5 and with 1A power tips blocked open.
(5) Turn current-limit and static-plug trimpots fully counterclockwise and then back CW about 5 turns. NOTE: More than 5 turns may be required before control will operate.
(6) Set current-limit for desired battery current with the motor in stall condition per Table 5.
(7) With truck on the ground set static-plugging for desired plugging distance.

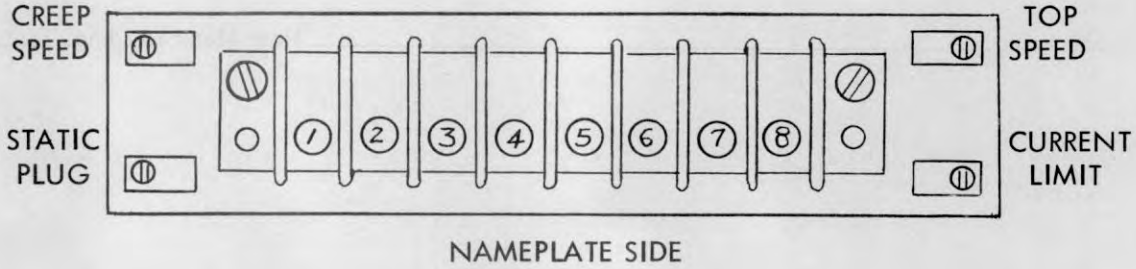

Figure 10—Card 1 Trimpot Adjustments.

DEALER CHECK-OUT SHEET FOR GE C290 SYSTEM
EC 50-60 & 70 SG

Truck Serial No. _____ Date _____

1. Battery Polarity Checked? _____ Battery Voltage _____ volts
2. Truck Polarity Specific Gravity _____
   a. Positive Lead to 2FU Checked? _____
   b. Negative Lead to Pump Contactors Checked? _____
3. GROUND TEST (+) to Frame _____ ohms, (—) to Frame _____ ohms.
4. CHECKING CONTROL WIRING.
   a. Term's 12 (+) to 16 (all switches open) _____ ohms
   b. *Term's 12 (+) to 16 (key, seat, 1MS & directional switches closed)* _____ *ohms*
5. SPEED POT, 1MS & 2MS SWITCHETTE OPERATION
   a. Wires 37 and 16 — 1MS actuates _____ ohms.
   b. Wires 37 and 16 — 2MS actuates _____ ohms.
6. Checked contactors manually?
7. Checked contactors electrically? _____
8. Checked creep speed? _____
9. CHECKING SPEED VOLTAGE AND CURRENT LIMIT
   c. Maximum speed voltage _____ volts.
   d. Current limit _____ amps.
10. FIELD WEAKENING ADJUSTMENTS.
   FW pickup (FW equipped machines only) _____ amps.
   FW drop out (FW equipped machines only) _____ amps.

Adjustments sealed on card 1.

Mechanic _____ Hour Meter Reading _____

4G.

SUBJECT: Nos. 1, 2 and 5 rectifiers in GE Solid State Controls used on EC-20 through EC-70 and NS Series Trucks.

PROBLEM: Because of several systems involved, the initial resistance values of rectifiers in our GE solid state controls have changed since our original instructions were published. The diagram and instructions below are designed to check Nos. 1, 2 and 5 rectifiers for proper operation in all GE SCR controls.

SOLUTION: See drawing and instructions below:

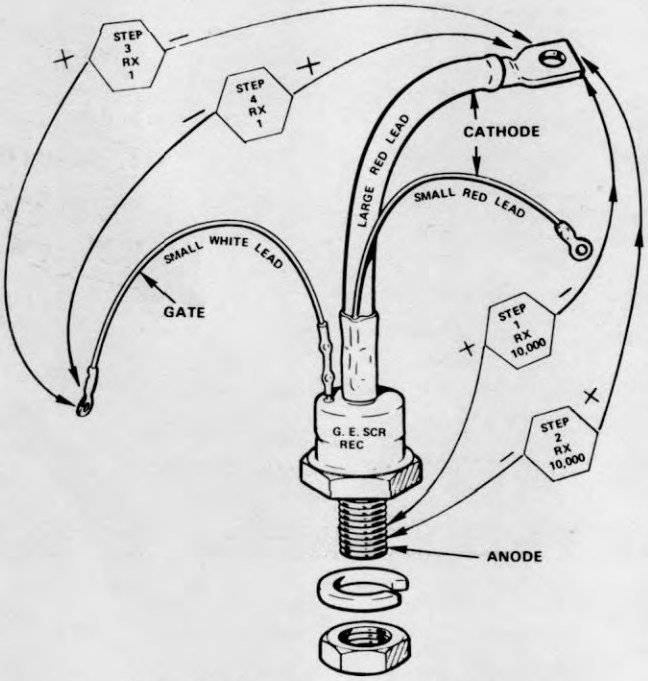

When checking recs 1-2&5 on all G.E. SCR systems

WHAT IS AN SCR?

Since the heart of the control is a silicon controlled rectifier (SCR), a general understanding of the characteristics of the device will be helpful. The SCR is a semiconductor rectifier used as a latching switch; i.e., it may assume either a conducting or nonconducting state (On or Off).

The SCR can be turned on by a momentary application of control current to the gate. To turn it off, it is necessary in addition to removing the turn-on signal from the gate, either to remove all power from the SCR or to apply momentary reverse voltage between cathode and anode.

RECS	STEPS 1 & 2	3	4
No. 1	100,000 ohms minimum	1 to 1,000 ohms	5 ohms min.
No. 2	Same as No. 1 rec	1 to 1,000 ohms	5 ohms min.
No. 5	Same as No. 1 rec	1 to 500 ohms	5 ohms min.

DM:ap

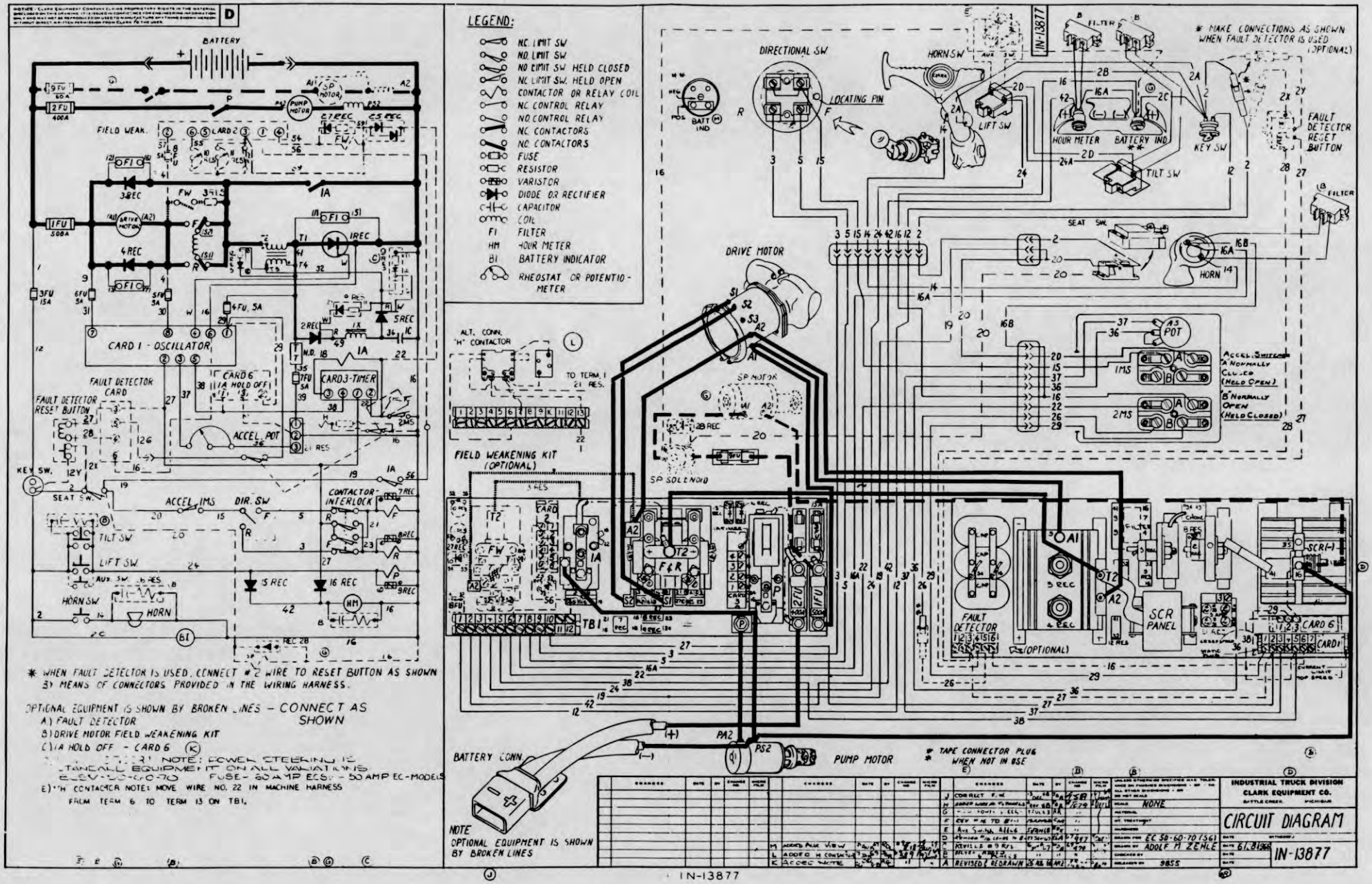
LEGEND:
NC LIMIT SW
NO LIMIT SW
NO LIMIT SW HELD CLOSED
NC LIMIT SW. HELD OPEN
CONTACTOR OR RELAY COIL
NC CONTROL RELAY
NO CONTROL RELAY
NC CONTACTORS
NO CONTACTORS
FUSE
RESISTOR
VARISTOR
DIODE OR RECTIFIER
CAPACITOR
COIL
FI FILTER
HM HOUR METER
BI BATTERY INDICATOR
RHEOSTAT OR POTENTIO-METER
BATTERY
CARD 1 - OSCILLATOR
CARD 3 - TIMER
CARD 6 1A HOLD OFF
FAULT DETECTOR CARD
FAULT DETECTOR RESET BUTTON
ACCEL. POT
KEY SW.
SEAT SW.
TILT SW
LIFT SW
HORN SW
HORN
DIR. SW
CONTACTOR INTERLOCK
FIELD WEAK.
DRIVE MOTOR
PUMP MOTOR
SP MOTOR
SP SOLENOID
ALT. CONN. 'H' CONTACTOR
TO TERM. 1 21 RES.
FIELD WEAKENING KIT (OPTIONAL)
BATT IND
DIRECTIONAL SW
LOCATING PIN
HORN SW
LIFT SW
HOUR METER
BATTERY IND
KEY SW
TILT SW
FILTER
SEAT SW.
HORN
POT
ACCEL. SWITCH
A NORMALLY CLOSED (HELD OPEN)
B NORMALLY OPEN (HELD CLOSED)
FAULT DETECTOR RESET BUTTON
* MAKE CONNECTIONS AS SHOWN WHEN FAULT DETECTOR IS USED (OPTIONAL)
FAULT DETECTOR
(OPTIONAL)
SCR PANEL
SCR(-)
CARD 6
CARD 1
BATTERY CONN.
PUMP MOTOR
* TAPE CONNECTOR PLUG WHEN NOT IN USE
NOTE
OPTIONAL EQUIPMENT IS SHOWN BY BROKEN LINES
* WHEN FAULT DETECTOR IS USED, CONNECT #2 WIRE TO RESET BUTTON AS SHOWN BY MEANS OF CONNECTORS PROVIDED IN THE WIRING HARNESS.
OPTIONAL EQUIPMENT IS SHOWN BY BROKEN LINES - CONNECT AS SHOWN
A) FAULT DETECTOR
B) DRIVE MOTOR FIELD WEAKENING KIT
C) 1A HOLD OFF - CARD 6
NOTE: POWER STEERING IS STANDARD EQUIPMENT ON ALL VARIATIONS ELEV-50-60-70 FUSE - 50 AMP ECS - 50 AMP EC-MODELS
E) "H" CONTACTOR NOTE: MOVE WIRE NO. 22 IN MACHINE HARNESS FROM TERM 6 TO TERM 13 ON TB1.
INDUSTRIAL TRUCK DIVISION
CLARK EQUIPMENT CO.
BATTLE CREEK, MICHIGAN
CIRCUIT DIAGRAM
NONE
EC 50-60-70 (56)
ADOLF M ZEHLE
9855
IN-13877